D17 Engine

Safety, Operation, Maintenance & Parts Manual

007334 Engine Module, LT15D17 rev.G

Safety is our #1 concern!

April 2010

Form #1630

Used with:	
LT15D17	**rev. E8.14**
LT15D17W	**rev. A2.00**

WARNING! Read and understand this manual before using this machine.

California

Proposition 65 Warning

WARNING: Breathing gas/diesel engine exhaust exposes you to chemicals known to the State of California to cause cancer and birth defects or other reproductive harm.

Always start and operate the engine in a well-ventilated area.
If in an enclosed area, vent the exhaust to the outside.
Do not modify or tamper with the exhaust system.
Do not idle the engine except as necessary.

For more information go to **www.P65warnings.ca.gov**.

WARNING: Drilling, sawing, sanding or machining wood products can expose you to wood dust, a substance known to the State of California to cause cancer. Avoid inhaling wood dust or use a dust mask or other safeguards for personal protection.

For more information go to **www.P65Warnings.ca.gov/wood**.

Active Patents assigned to Wood-Mizer, LLC

Wood-Mizer, LLC has received patents that protect our inventions which are a result of a dedication to research, innovation, development, and design. Learn more at: *woodmizer.com/patents*

©2024 Wood-Mizer LLC

Printed in the United States of America, all rights reserved. No part of this manual may be reproduced in any form by any photographic, electronic, mechanical or other means or used in any information storage and retrieval system without written permission from

Wood-Mizer, LLC
8180 West 10th Street
Indianapolis, Indiana 46214

Table of Contents Section-Page

SECTION 1 SAFETY

1.1 Safety 1-1

SECTION 2 OPERATION

2.1 Starting The Engine 2-1

SECTION 3 MAINTENANCE

3.1 Battery 3-1
3.2 Air Filter & Pre-Cleaner 3-1
3.3 Fuel Filter 3-1
3.4 Miscellaneous Maintenance 3-1

SECTION 4 REPLACEMENT PARTS

4.1 Fuel Tank 4-1
4.2 Engine Assembly 4-2
4.3 Throttle/Clutch Assembly 4-4

SECTION 1 SAFETY

This manual is provided as a supplement to the equipment manufacturer's manuals.

This manual provides information specific to the use of this equipment on the Wood-Mizer® sawmill. Refer to the sawmill operator's manual and manufacturer's manual before attempting to operate this equipment.

> ***NOTICE*** Read the sawmill operator's manual and engine manufacturer's manual for instructions and safety precautions before operating this equipment.

The information and instructions given in this manual do not amend or extend the limited warranties for the equipment given at the time of purchase.

Refer to the manufacturer's manual for maintenance intervals and procedures unless otherwise instructed in this manual. Follow the manufacturer's recommendations for dusty conditions.

> ***NOTICE*** This manual only provides information about additional procedures or procedures to be performed at different time intervals than found in the manufacturer's manuals. Refer to the manufacturer's manual for complete maintenance instructions.

WARNING! Clean sawdust from all guards, vents, control boxes, or any area where sawdust may gather **after every shift**. Failure to do so may result in fire, causing death or serious injury.

1.1 Safety

Use caution when performing maintenance or service to the engine.

DANGER! Take proper protective measures against rotating shafts, pulleys, fans, etc.

Ensure loose clothing or long hair does not engage rotating members.

DANGER! Do not touch or perform service functions on a hot engine. Allow the engine to cool sufficiently before beginning any service function. Hot engine components will cause serious burns.

WARNING! Remove the blade before performing any engine service.

WARNING! Wear eye, hand, and foot protection equipment when performing service functions.

SECTION 2 OPERATION

2.1 Starting The Engine

DANGER! Ensure the blade is disengaged and all persons are out of the path of the blade before starting. Failure to do so will result in death or serious injury.

DANGER! Operate your engine only in well ventilated areas. The exhaust gases of your engine can cause nausea, delirium, and potentially death unless adequate ventilation is present.

DANGER! Never operate an engine with a fuel or oil leak. This is a fire hazard.

WARNING! Do not operate engine without proper and operational spark arrester/muffler. Sparks emitted from the engine exhaust could ignite surrounding materials, causing serious injury or death.

See the engine manufacturer's manual for lubricating oil recommendations.

Use #2 or better quality diesel fuel for above freezing starting.

Use a #1 quality diesel fuel for below freezing starting.

Turn the key switch to the start (#2) position and release.

ENGINE SHUTOFF

Turn the key switch to the off (#0) position.

SECTION 3 MAINTENANCE

3.1 Battery

Check the battery electrolyte level every 50 hours of operation. See manufacturer's manual for instructions.

DANGER! Batteries expel explosive gases.

Keep sparks, flames, burning cigarettes, or other ignition sources away at all times.

Wear a face shield when working on batteries.

WARNING! Battery posts, terminals and related accessories contain lead and lead compounds. Wash hands after handling.

3.2 Air Filter & Pre-Cleaner

WARNING! Always wear proper safety equipment when performing service functions, including eye protection, breathing protection, hand protection and foot protection.

Service the pre-cleaner every four hours of operation by gently shaking excess sawdust and debris from the foam piece.

Clean the air filter (air cleaner element) and pre-cleaner (element wrapper) every eight hours of operation.

Replace the air filter (cleaner) every 200 hours of operation.

Replace the pre-cleaner (element wrapper) every 2000 hours of operation.

See the engine manual for further instructions.

3.3 Fuel Filter

Replace the fuel filter every 100 hours of operation or as required for engine performance.

3.4 Miscellaneous Maintenance

CAUTION! Do not remove the plug wire to check for electrical spark. Damage to the ignition circuit may result.

Inspect the spark plugs every 100 hours of operation. Remove any deposits and adjust gap if necessary. See engine manual for further information.

Clean and inspect the spark arresters every 50 hours of operation. **Replace if damaged.**

Review the manufacturer's manual for maintenance intervals.

SECTION 4 REPLACEMENT PARTS

4.1 Fuel Tank

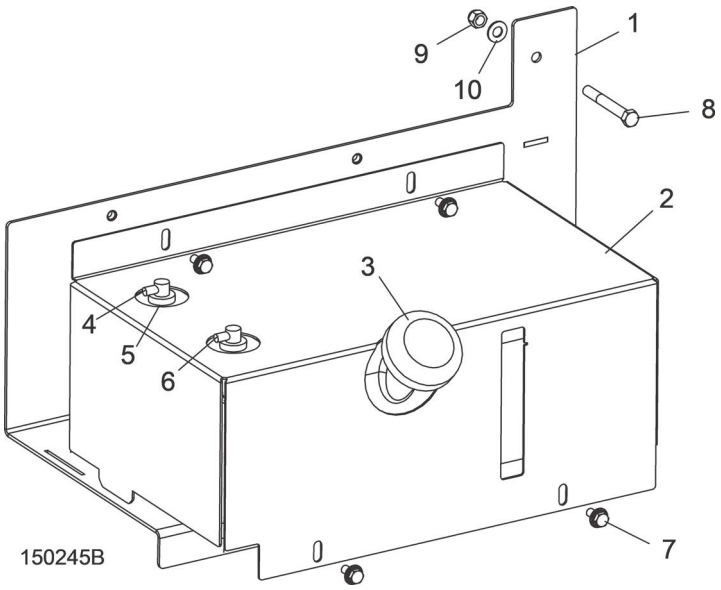

REF	PART #	DESCRIPTION	COMMENTS	QTY.
	074828	**TANK ASSEMBLY, 5 GALLON DIESEL**		1
1	103802	Weldment, Fuel Tank Tray		1
2	103867	Cover, Fuel Tank		1
	103928	Tank, 5 Gallon Low Pro Diesel		1
3	061257	Cap, Fuel Tank Diesel 080185BE		1
4	061255	Fitting, Pick-Up/Tube Diesel 468871A		1
5	061250	Grommet, Shut Off 046881		2
6	061256	Fitting, Return/tube Diesel 468489		1
7	F05006-101	Bolt, 5/16-18 x 3/4” Hex Head w/Flat&Lock Washer		4
8	F05007-73	Bolt, 3/8-16 x 3” Hex Head Grade 5		2
9	F05010-10	Nut, 3/8-16 Hex Nyloc		2
10	F05011-3	Washer, 3/8” Flat SAE		2
	R02423-1	Hose, Fuel 3/16" EPA 15G CARB		8 Ft.
	R02423-2	Hose, Fuel 1/4" EPA 15G CARB		8 Ft.
	103802	Weldment, Fuel Tank Tray		1
	P649	Clamp, 7/32in-5/8in Hose		2
	P07584	Clamp, 1/2EMT Coated		1

4.2 Engine Assembly

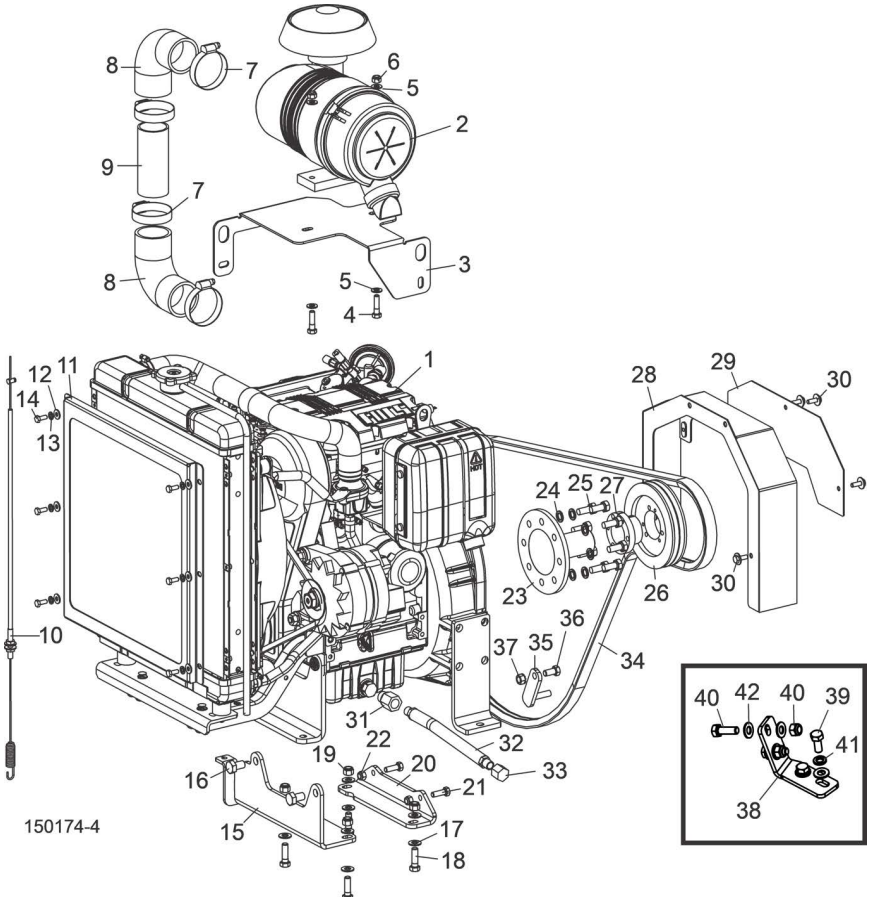

REF	PART #	DESCRIPTION	COMMENTS	QTY.
	007333	Engine Assembly, LT15 18HP Diesel		1
1	007332	Engine, 18HP Kohler Diesel Model KDW702	Available in assemblies only.	1
2	007401	Filter Assembly, Kohler #ED0037004550-S		1
	007613	Filter, Kohler Secondary Air #ED0021751250-S		1
	007408	Filter, Kohler Primary Air #ED0021751240-S		1
	007614	Motor, Kohler Starter #ED0058402240-S		1
	065408	Alternator, Kohler 65A #ED0011572700-S	065408 replaces 014277 Kohler 14V 45A #ED0011573600-S Alternator and 065409 replaces 014212 Kohler Fan #ED0024403080-S Belt.	1
	065409[1]	Belt, Kohler Fan #ED0024403160-S		1
	061187	Filter, Kohler/Lombardini Oil #ED0021752830-S		1
	061188	Filter, Kohler/Lombardini Fuel #ED0021752880-S		1
	014557	Switch Kit, Oil Pressure w/Gasket		1
	014279	Switch, Diesel Fuel Shut-Off		1
	014289	Pump, Diesel Fuel		1
	014278	Plug, Diesel Glow		2

REF	PART #	DESCRIPTION	COMMENTS	QTY.
3	074939	Bracket, Air Filter Mount		1
4	F05006-18	Bolt, 5/16-18 x 1 1/4” Hex Head Full Thread		2
5	F05011-17	Washer, 5/16” SAE Flat		4
6	F05010-20	Nut, 5/16-18 Self-Locking Hex		2
7	P09895	Clamp, 2 1/2” Hose		4
8	007394	Elbow, 90° x 2” ID Rubber		2
9	007395	Tube, 1 3/4” ID x 2” OD x 4”		1
10	007392	Cable, LT15 D18		1
11	007465	Guard Weldment, D18 Radiator		1
12	F05011-11	Washer, 1/4” SAE Flat		6
13	F05011-14	Washer, 1/4” Split Lock		6
14	F05004-219	Bolt, M6 x 1.0 x 16mm Hex Head		6
15	007427	Bracket Weldment, Rear D18 Mount		1
16	F05004-251	Bolt, M12 x 1.75 x 20mm Hex Head Full Thread		2
17	F05011-3	Washer, 3/8” SAE Flat		8
18	F05007-123	Bolt, 3/8-16 x 1 1/4” Hex Head Grade 5		4
19	F05010-10	Nut, 3/8-16 Hex Nylon Lock		4
20	007426	Bracket, D18 Front Mount		1
21	F05006-27	Bolt, 5/16-18 x 1” Hex Head Grade 5		2
22	F05010-58	Nut, 5/16-18 Hex Nylon Lock		2
23	014024	Shaft, Diesel Engine Drive		1
24	F05011-88	Washer, 10mm Split Lock		8
25	F81003-11	Bolt, M10-1.5 x 24mm Hex Head Grade 8.8		8
26	047742	Sheave, 3V5.6 x 2-SH		1
27	007338	Bushing, SH - 1 9/16”		1
28	007336	Guard Weldment, Motor Pulley		1
29	007344	Cover, Engine Pulley Guard		1
30	F05005-134	Bolt, 1/4-20 x 3/4” Hex w/Conical Washer Head		4
31	065163	Fitting, M18 x 3/8” NPT Adapter		1
32	P10082	Hose, 3/8” NPT x 9 5/8” Rubber		1
33	P04332	Fitting, 3/8” Galvanized Pipe Cap		1
34	047751	Belt, 2/3VFL900 Drive		1
35	048237	Support Weldment, Drive Belt		1
36	F05007-118	Bolt, 3/8-16 x 3/4” Hex Head Grade 5		1
37	F05010-19	Nut, 3/8-16 Self-Locking Hex		1
	074942	Mount Assembly, LT15D17 Control		1
38	074938	Plate, LT15D17 Control Mount		1
39	F05006-102	Bolt, 5/16-18x3/4 HH Gr5		2
40	F05006-27	Bolt, 5/16-18x1 Gr5 HH		2
41	F05010-58	Nut, 5/16-18 Nylok Hex		2
42	F05011-13	Washer, 5/16 Split Lock		2
43	F05011-17	Washer, 5/16 SAE Flat		6
	074947	Switch, Key/Eng. Controller D17 Kohler		1
	007612	Switch, Key Kohler D17 w/Keys		1
	007348	Keys, Kohler D17 Engine		1

4.3 Throttle/Clutch Assembly

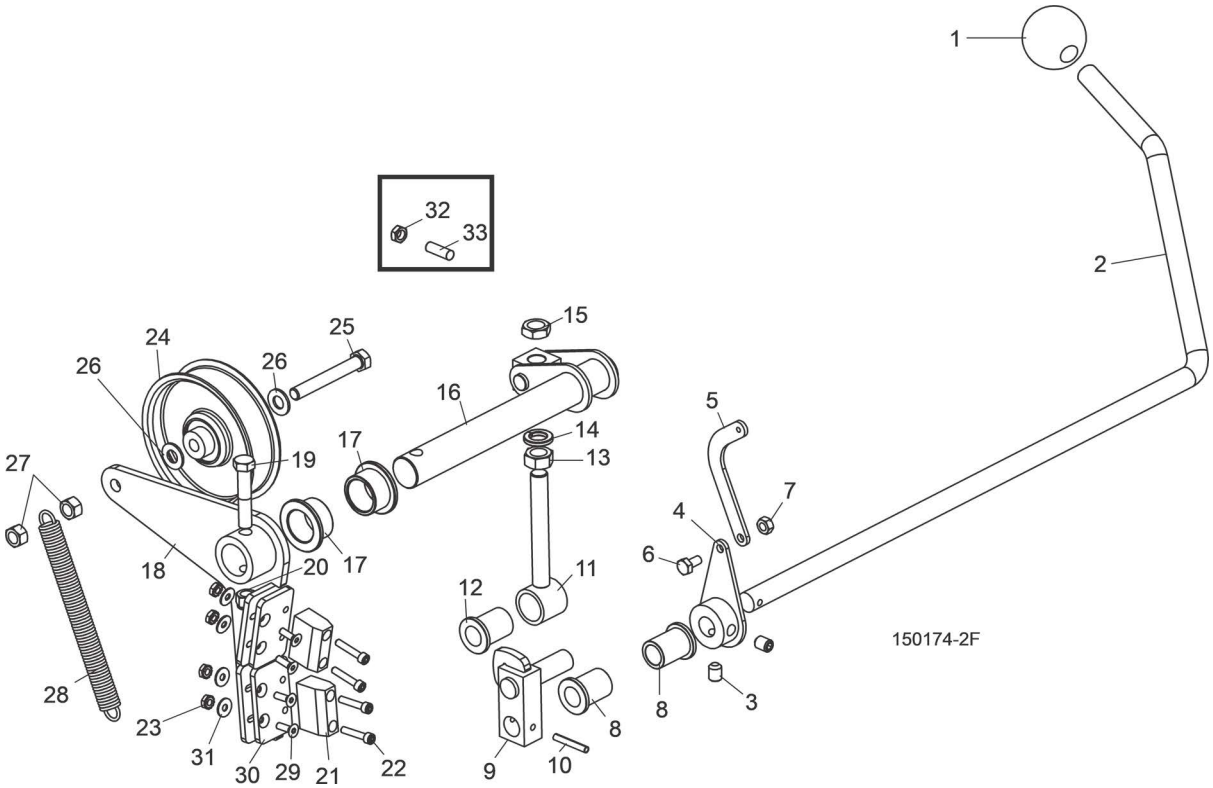

REF	PART #	DESCRIPTION	COMMENTS	QTY.
1	P04211	**KNOB, 5/8-11 BALL**		1
2	062313	**HANDLE, LT15 CLUTCH**		1
3	F05007-68	**SCREW, 3/8-16 X 3/8” SOCKET HEAD CUP PT SET**		2
4	034815	**ACTUATOR WELDMENT, THROTTLE LT15D&G**		1
5	034818	**LINKAGE, THROTTLE LT15D&G**		1
6	F05005-15	**BOLT, 1/4-20 X 1/2” HEX HEAD**		1
7	F05010-21	**NUT, 1/4-20 SWAGED**		1
8	016486	**BUSHING, 5/8” ID X 7/8” OD X 1 1/8” LONG FL BRONZE**		2
9	065572	**BLOCK WELDMENT, LINKAGE CLUTCH/BRAKE**	Replaces 034612 to make clutch pivot stop adjustable Rev. E6.10.	1
10	F05012-16	**PIN, 3/16” X 1 1/4” ROLL**		1
	034605	**LINKAGE ASSEMBLY, W/BEARING**		1
11	034604	Link Weldment, Clutch/Brake	Available in assemblies only.	1
12	016486	Bushing, 5/8” ID x 7/8” OD x 1 1/8” Long Fl Bronze		1
13	F05010-35	**NUT, 1/2-13 FREE HEX, ZINC**		1
14	F05011-9	**WASHER, 1/2” SPLIT LOCK**		1
15	F05010-31	**NUT, 1/2-13 JAM**		1
16	034608	**PIVOT WELDMENT, CLUTCH/BRAKE**		1
17	P737	**BUSHING, 1” X 1 1/4” X 3/4” FLG BRONZE**		2

REF	PART #	DESCRIPTION	COMMENTS	QTY.
	065874	**BRAKE/CLUTCH ASSEMBLY, LT15**	Replaces Brake/Clutch Assembly 034603 to improve durability (Rev. E7.01). Brake/Clutch Assembly 034603 (including Clutch/Brake Arm Weldment 034613) modified 9/10. Spring mount hardware changed to provide more freedom of movement and prevent binding point in spring.	1
18	065873	Arm Weldment, Clutch/Brake LT15		1
19	F05007-124	Bolt, 3/8-16 x 2” Hex Head Gr5		1
20	F05010-10	Nut, 3/8-16 Hex Nylon Lock		1
21	016488	Block, LT15 Brake		2
22	F05004-2	Screw, 10-24 x 1” Socket Head		4
23	F05010-14	Nut, #10-24 Keps		8
24	034602	Idler, 4" O.D. x 3/8” Bore		1
25	F05007-230	Bolt, 3/8-16 x 2-3/4” Hex Head Gr5 Full Thread	Replaces Brake/Clutch Assembly 034603 to improve durability (Rev. E7.01). Brake/Clutch Assembly 034603 (including Clutch/Brake Arm Weldment 034613) modified 9/10. Spring mount hardware changed to provide more freedom of movement and prevent binding point in spring.	1
26	F05011-3	Washer, 3/8 Flat		2
27	F05010-25	Nut, 3/8-16 Swaged Lock		2
28	034810	Spring, Idler Arm LT15D/E/G		1
29	F05004-282	Screw, 10-24 x 5/8” FSHC		4
30	065872	Plate, Brake Adjustment		2
31	F05011-18	Washer, #10 SAE Flat		4