Wood-Mizer® Sawmill

Safety, Setup, Operation & Maintenance Manual

LT28 **rev. A1.00 - A6.01**

Safety is our #1 concern! Read and understand all safety information and instructions before operating, setting up or maintaining this machine.

August 2005

Form #1340

Table of Contents Section-Page

SECTION 1 INTRODUCTION 1-1

1.1 About This Manual....1-1
1.2 Getting Service....1-2
General Contact Information....1-2
Branches & Authorized Sales Centers....1-3
1.3 Specifications....1-5
1.4 Customer and Sawmill Identification....1-7

SECTION 2 SAFETY 2-1

2.1 Safety Symbols....2-1
2.2 Safety Instructions....2-2

SECTION 3 SAWMILL SETUP 3-1

3.1 Stationary Sawmill Setup....3-1
3.2 Portable Sawmill Setup....3-3
3.3 Replacing The Blade....3-7
3.4 Tensioning The Blade....3-8
3.5 Tracking The Blade....3-10
3.6 Starting The Engine....3-13

SECTION 4 SAWMILL OPERATION 4-14

4.1 Loading, Turning And Clamping Logs....4-14
4.2 Up/Down Operation....4-16
4.3 Blade Guide Arm Operation....4-17
4.4 Clutch Operation....4-18
4.5 Feed Operation....4-19
4.6 Cutting The Log....4-22
4.7 Edging....4-24
4.8 Blade Height Scale....4-25
4.9 Water Lube Operation....4-27
4.10 Preparing The Sawmill For Towing....4-29

SECTION 5 MAINTENANCE 5-1

5.1 Wear Life....5-1
5.2 Blade Guides....5-2
5.3 Sawdust Removal....5-3
5.4 Carriage Track, Wiper & Scrapers....5-4
5.5 Vertical Mast Rails....5-6
5.6 Miscellaneous....5-7
5.7 Blade Wheel Belts....5-8
5.8 Drive Belt Adjustment....5-9

5.9 Up/Down System.....5-11
5.10 Feed Rope.....5-14
5.11 Charging The Battery.....5-18

MAINTENANCE LOG **5-20**

SECTION 6 TROUBLESHOOTING GUIDE **6-1**

6.1 Sawing Problems.....6-1
6.2 Power Feed Problems.....6-3
LT28 Rev. A1.00 - A6.01.....6-3

SECTION 7 SAWMILL ALIGNMENT **7-1**

7.1 Routine Alignment Procedure.....7-1
Blade Installation.....7-1
Saw Head Tilt.....7-2
Blade Guide Arm Alignment.....7-4
Blade Guide Vertical Tilt Alignment.....7-6
Blade Guide Horizontal Tilt Adjustment.....7-8
Blade Guide Flange Spacing.....7-10
Side Support Alignment.....7-11
Blade Height Scale Adjustment.....7-13
7.2 Complete Alignment Procedure.....7-14
Frame Setup.....7-14
Blade Installation.....7-15
Blade Wheel Alignment.....7-16
Bed Rail Adjustment.....7-22
Blade Guide Installation.....7-25
Blade Guide Arm Alignment.....7-27
Blade Guide Deflection.....7-29
Blade Guide Vertical Tilt Alignment.....7-30
Blade Guide Horizontal Tilt Adjustment.....7-32
Blade Guide Flange Spacing.....7-34
Side Support Alignment.....7-35
Saw Head Tilt.....7-37
Blade Height Scale Adjustment.....7-39

SECTION 1 INTRODUCTION

1.1 About This Manual

This manual is to replace or to be used with all previous information received on the Wood-Mizer® * sawmill. All future mailings will be an addition to or a revision of individual sections of this manual as we obtain new information.

The information and instructions given in this manual do not amend or extend the limited warranties for the equipment given at the time of purchase.

For general information regarding Wood-Mizer and our “Forest to Final Form” products, please refer to the All Products Catalog in your support package.

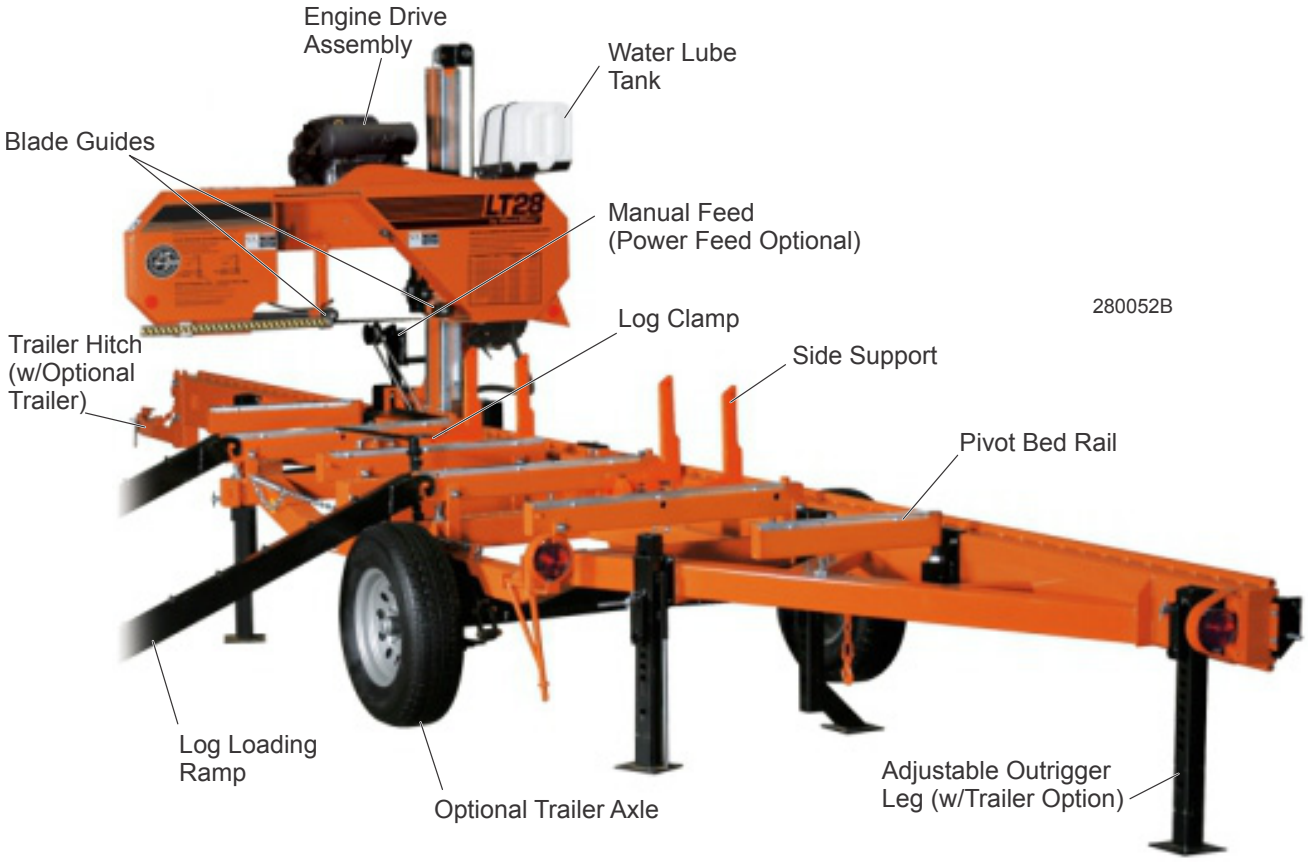

*Wood-Mizer® is a registered trademark of Wood-Mizer Products, Inc.

1.2 Getting Service

Wood-Mizer is committed to providing you with the latest technology, best quality and strongest customer service available on the market today. We continually evaluate our customers' needs to ensure we're meeting current wood-processing demands. Your comments and suggestions are welcome.

General Contact Information

Toll free phone numbers are listed below for the *continental* U.S. and Canada. See the next page for contact information for specific Wood-Mizer locations.

	United States	**Canada**
Sales	1-800-553-0182	1-877-866-0667
Service	1-800-525-8100	1-877-866-0667
Website	www.woodmizer.com	www.woodmizer.ca
E-mail	woodmizer@woodmizer.com	oninfo@woodmizer.com

Office Hours: All times are Eastern Standard Time.

Monday - Friday	Saturday (Indianapolis Office Only)	Sunday
8 a.m. to 5 p.m.	8 a.m. to 12 p.m.	Closed

Please have your vehicle identification number and your customer number ready when you call.

Wood-Mizer will accept these methods of payment:

- Visa, Mastercard, or Discover
- COD
- Prepayment
- Net 15 (with approved credit)

Be aware that shipping and handling charges may apply. Handling charges are based on size and quantity of order. In most cases, items will ship on the day they are ordered. Second Day and Next Day shipping are available at additional cost.

If your sawmill was purchased outside the United States or Canada, contact the distributor for service.

Branches & Authorized Sales Centers

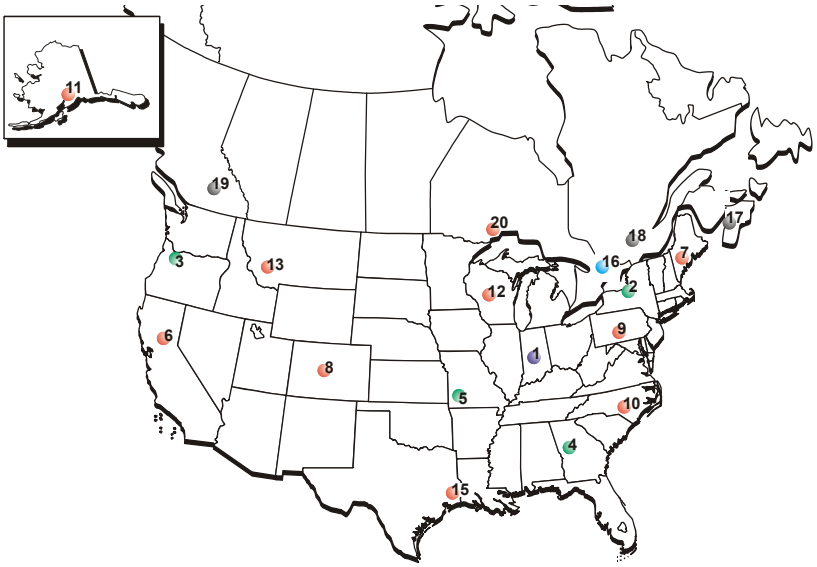

UNITED STATES

1 World Headquarters
8180 W. 10th Street
Indianapolis, IN 46214-2400
Toll Free (800) 553-0182
Phone (317) 271-1542
Fax (317) 273-1011

CANADA

16 Canadian Headquarters
396 County Road 36, Unit B
Lindsay, ON K9V 4R3
Toll Free (877) 357-3373
Phone (705) 878-5255
Fax (705) 878-5355

Wood-Mizer Branches

2 Wood-Mizer Northeast
8604 State Route 104
Hannibal, NY 13074
Phone (315) 564-5722
Fax (315) 564-7160
E-mail dscott@woodmizer.com

3 Wood-Mizer Portland
24435 N.E. Sandy Blvd.
Wood Village, OR 97060
Phone (503) 661-1939
Fax (503) 667-2961

4 Wood-Mizer South
74 Pine Road
Newnan, GA 30263-5141
Phone (770) 251-4894
Fax (770) 251-4896
E-mail ncollins@woodmizer.com

Authorized Sales Centers*

6 California
6980 Camp Far West Road
Sheridan, CA 95681
Phone (530) 633-4316
Fax (530) 533-2818
E-mail california@woodmizer.com

7 Maine
541 Borough Road
Chesterville, ME 04938
Phone (207) 645-2072
Fax (207) 645-3786
E-mail maine@woodmizer.com

8 Colorado
505 Gregg Drive
Buena Vista, CO 81211
Phone (719) 221 5477

Wood-Mizer Canada Branches

17 Wood-Mizer Canada East
Box 173, 2600 #1 Hwy
Aylesford, NS B0P 1C0
Phone/Fax (902) 847-9369

18 Wood-Mizer Canada Quebec
7 ch. Baie Grenville
Grenville-sur-la-Rouge, QC
J0V 1B0
Toll Free (877) 866-0667
Phone (819) 242-0414
Fax (819) 242-0714

19 Wood-Mizer Canada West
4770 46th Avenue S.E.
Salmon Arm, BC V1E 2W1
Toll Free (877) 866-0667
Phone (250) 833-1944
Fax (250) 833-1945

5 Wood-Mizer Missouri
9664 Lawrence 2130
Mt. Vernon, MO 65712
Phone (417) 466-9500
Fax (417) 471-1327
E-mail wbaugh@woodmizer.com

9 Pennsylvania
22638 Croghan Pike
Shade Gap, PA 17255
Phone (814) 259-9976
Fax (814) 259-3016
E-mail paasc@woodmizer.com

10 North Carolina
28002 Canton Road
Albemarle, NC 28001
Phone (704) 982-1673
Fax (704) 982-1619
E-mail carolina@woodmizer.com

11 Alaska
10661 Elies Drive
Anchorage, AK 99507
Phone (907) 336-5143
E-mail alaska@woodmizer.com

12 Wisconsin
2201 Highway O
Mosinee, WI 54455
Phone (715) 693-1929
E-mail wisconsin@woodmizer.com

13 Montana
51 Basin Creek Road
Basin, MT 59631
Phone (406) 225-4362
Fax (207) 645-3786
E-mail rockymountainwoodmizer@yahoo.com

14 Mississippi
123 Cable Bridge Road
Perkinston, MS 39573
Phone (601) 928-3022
E-mail msasc@woodmizer.com

15 Texas
11606 Highway 96 S
P.O. Box 2461
Kirbyville, TX 75956
Phone (409) 382-2714

Authorized Sales Centers*

20 Ontario North
2340 Dawson Road
Thunder Bay, ON P7G 2G2
Toll Free (877) 866-0667
Phone (807) 683-9243
Fax (807) 767-1123

21 East New Brunswick
161 Ave. De L'Eglise
St. Antoine, NB E4V 1M2
Toll Free (877) 866-0667
Phone (506) 525-1007
Fax (506) 525-2913

*Authorized Sales Centers offer limited services such as sawmill demos and training, routine service and sales of blades and common replacement parts

1.3 Specifications

Model: LT28 Rev. A1.00+

Dimensions:		**Metric**
Length:	26'-4"	8.02m
Width:	6'-6"	1.97m
Height (Ground To Mast):	7'-2"	2.18m
Height (Max Head Position):	8'5"	2.5m
Bed Height (Ground To Bed):	31 1/4"	0.79m
Blade Length:	158"	4.01m
Weights:		
Basic Unit with Trailer(with heaviest power option):		
Tongue Weight:		
Trailer:		
Axle Capacity:	3500 lbs	1587kg
Tire Capacity:	1870 lbs	848.2kg
Tire Size:	ST215/75R14	
Cutting Capacity:		
Length:	21'	6.4m
Diameter:	32"	0.81m
Maximum Log Weight:	4400 lbs	1995kg
Max Clamp Width (from stop block):	34"	0.86m
Max Throat Width (guide to guide):	26"	0.66m
Max Cant Width (outer guide to stop block):	22 1/2"	0.57m
Min. Cut Height:	1"	25.4mm
Max. Cut Height:	32 1/2"	0.82m
Maximum Throat Depth:	10 1/2"	0.26m

Power Unit:	**G18**	**G25**	**D17**
Manufacturer:	Kohler	Kohler	Kohler
Fuel:	gas	gas	Diesel
Horsepower Rating*:	19	23.5	15.4
Weight (lbs)*:	90	94	145.4
Cooling System*:	air	air	water
Noise Level (dba)*:	95-101.3(@3000 rpm)	96-103(@3000 rpm)	78 (At 7m in an open field at 3600rpm*)
Fuel Consumption(gallon/hour)*:	1.2-1.6	1.5-2	.54 (Full Load, @1800 rpm) .43 (75% Load, @1800 rpm) .32 (50% Load, @1800 rpm) .19 (25% Load, @1800 rpm) 1.10 (Full Load, @3600 rpm) .87 (75% Load, @3600 rpm) .66 (50% Load, @3600 rpm) .39 (25% Load, @3600 rpm)

Rates:	
Hourly Production (Average range w/experienced operators/average size logs):	350 bd ft/hr

*Manufacturer's Specification

Battery Specifications							
Group No.	Type No.	Performance Level		Approximate Weight	Maximum Overall Dimensions		
		Cranking Performance	Reserve Capacity	Wet	Length	Width	Height
26	526MF	535CC	80	31.0 lb. (14.06 kg)	8.5 in. (216 mm)	6.75 in. (171 mm)	8.0 in. (203 mm)

1.4 Customer and Sawmill Identification

Each Wood-Mizer sawmill has a model number and a 17-digit Vehicle Identification Number (VIN). In addition, when you pick up your mill, you will receive a customer number. These three numbers will help expedite our service to you. Please locate them now and write them below so you have quick, easy access to them. See the following figures for model number and V.I.N. descriptions and locations.

(To be filled in by purchaser)

Mill Model _____

Mill VIN _____

Customer No. _____

LT28	G18	
Basic Sawmill I.D.	**Engine/Motor Configuration**	

MODEL NUMBER DESCRIPTION

See below for a description of the V.I.N.

Company Identification Number 456=Wood-Mizer Indiana	Weight Class; A=Under 3,000 lbs B=3,001-4,000 lbs C=4,001-5,000 lbs D=5,001-6,000 lbs	Product No.; 2=LT28, 3=LT30/40, 4=LT30HD/40HD, 5=LT/40 Super, 6=LT40HD Super, 7=LT60HD/70HD, 8=LT50HD	Length of the Trailer; 20=20 Ft., 24=24', 35=35'	Number of axles on the trailer	Check Digit Add all the numbers and divide by 11	Year of Manufacture; X=1999, Y=2000, 1=2001, 2=2002, 3=2003, etc...	State of Manufacture N=Indiana, P=Poland	Month of Manufacture A=January, B=February, C=March, etc...	Revision Level	Sequence Number Ranging from 000-999	End of 17-Digit VIN	Revision Level (Repeated)	Two-Digit Minor Revision Level
456	**A**	**5**	**24**	**1**	**X**	**S**	**N**	**A**	**F9**	**017**		**F9**	**.01**

V.I.N. DESCRIPTION.

The model number and V.I.N. can be found in the following locations.

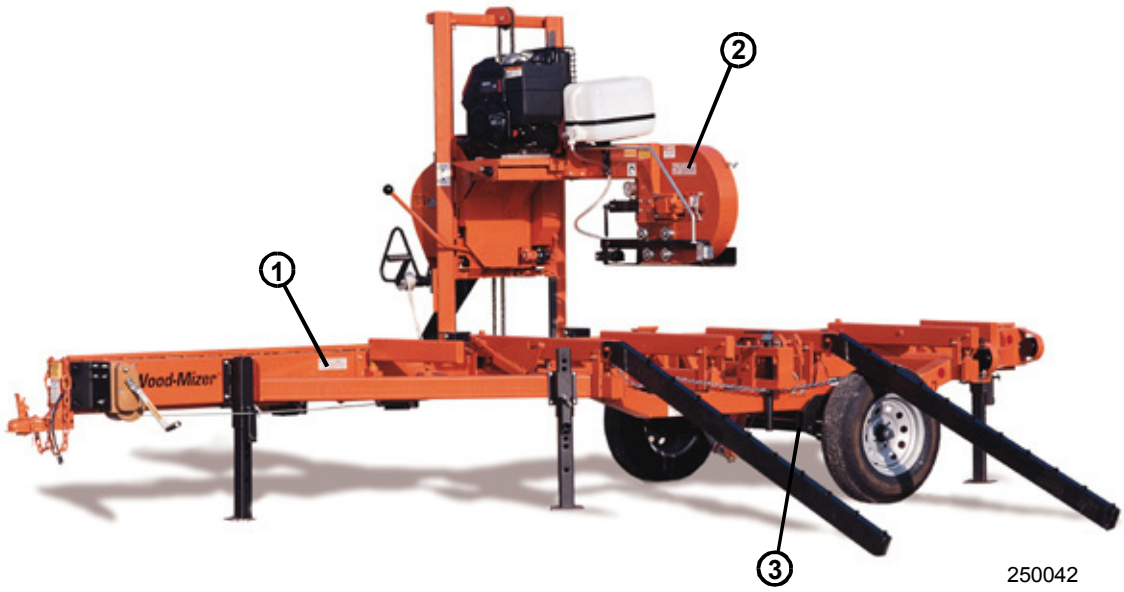

MODEL NUMBER AND V.I.N. LOCATIONS.

SECTION 2 SAFETY

2.1 Safety Symbols

The following symbols and signal words call your attention to instructions concerning your personal safety. Be sure to observe and follow these instructions.

DANGER! indicates an imminently hazardous situation which, if not avoided, will result in death or serious injury.

WARNING! suggests a potentially hazardous situation which, if not avoided, could result in death or serious injury.

CAUTION! refers to potentially hazardous situations which, if not avoided, may result in minor or moderate injury or damage to equipment.

IMPORTANT! indicates vital information.

NOTE: gives helpful information.

Warning stripes are placed on areas where a single decal would be insufficient. To avoid serious injury, keep out of the path of any equipment marked with warning stripes.

2.2 Safety Instructions

NOTE: ONLY safety instructions regarding personal injury are listed in this section. Caution statements regarding only equipment damage appear where applicable throughout the manual.

OBSERVE SAFETY INSTRUCTIONS

IMPORTANT! Read the entire Operator's Manual before operating the sawmill. Take notice of all safety warnings throughout this manual and those posted on the machine. Keep this manual with this machine at all times, regardless of ownership.

Also read any additional manufacturer's manuals and observe any applicable safety instructions including dangers, warnings, and cautions.

Only persons who have read and understood the entire operator's manual should operate the sawmill. The sawmill is not intended for use by or around children.

IMPORTANT! It is always the owner's responsibility to comply with all applicable federal, state and local laws, rules and regulations regarding the ownership, operation and towing of your Wood-Mizer sawmill. All Wood-Mizer mill owners are encouraged to become thoroughly familiar with these applicable laws and comply with them fully while using or towing the mill.

WEAR SAFETY CLOTHING

WARNING! Secure all loose clothing and jewelry before operating the sawmill. Failure to do so may result in serious injury or death.

WARNING! Always wear gloves and eye protection when handling bandsaw blades. Changing blades is safest when done by one person! Keep all other persons away from area when coiling, carrying or changing a blade. Failure to do so may result in serious injury.

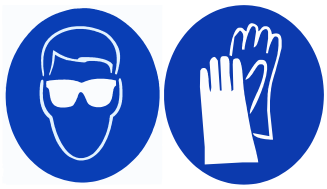

WARNING! Always wear eye, ear, respiration, and foot protection when operating or servicing the sawmill.

KEEP SAWMILL AND AREA AROUND SAWMILL CLEAN

DANGER! Maintain a clean and clear path for all necessary movement around the mill and lumber stacking areas. Failure to do so will result in serious injury.

HANDLE FUEL/LUBRICANTS SAFELY

DANGER! Due to the flammable nature of fuel and oil, never smoke, weld, grind or allow sparks near your engine or storage tanks, especially during times of fueling.

DANGER! Never allow fuel to spill on a hot engine during fueling operations or otherwise. The hot temperature of your engine could induce a fire or explosion.

WARNING! Store gasoline away from sawdust and other flammable materials. Failure to do so may result in serious injury.

WARNING! Use ONLY water and Wood-Mizer Lube Additive with the water lube accessory. Never use flammable fuels or liquids such as diesel fuel. If these types of liquids are necessary to clean the blade, remove it and clean with a rag. Failure to do so can damage the equipment and may result in serious injury or death.

WARNING! Drum switch grease contains Petroleum Hydrocarbon Lubricant. Eye and skin irritant. If introduced into eyes, flush with water for at least 15 minutes. If film or irritation persists, seek medical attention. Wash skin with soap and water. If ingested, do not induce vomiting - contact a physician. KEEP OUT OF THE REACH OF CHILDREN.

DISPOSE OF SAWING BY-PRODUCTS PROPERLY

IMPORTANT! Always properly dispose of all sawing by-products, including sawdust and other debris, coolant, oil, fuel, oil filters and fuel filters.

USE CAUTION WHEN WORKING WITH BATTERIES

DANGER! Batteries expel explosive gases. Keep sparks, flames, burning cigarettes, or other ignition sources away at all times. Always wear safety goggles and a face shield when working near batteries. Failure to do so will cause serious injury. [1]

WARNING! Battery posts, terminals and related accessories contain lead and lead compounds, chemicals known to the State of California to cause cancer and reproductive harm. Wash hands after handling.

WARNING! Charge the battery in a well ventilated area. Do not attempt to charge a frozen battery.

Use extreme care to avoid spilling or splashing electrolyte (which is dilute sulfuric acid) as it can destroy clothing and burn the skin. If electrolyte is spilled or splashed on clothing or the body, it should be neutralized immediately and then rinsed with clean water. A solution of baking soda, or household ammonia, and water may be used as a neutralizer.

Electrolyte splashed into the eyes is extremely dangerous. If this should happen, force the eye open and flood it with cool, clean water for approximately fifteen minutes. A doctor should be called immediately when the accident occurs and “on-the-spot” medical attention given if possible. If a doctor cannot come to the scene of the accident immediately, follow his instructions concerning actions to take. Do not add eye drops or other medication unless advised to do so by the doctor. Do not place a battery or acid within the reach of children. If acid (electrolyte) is taken internally drink large quantities of water or milk. Follow with milk of magnesia, beaten egg or vegetable oil. Call a physician immediately.

If electrolyte is spilled or splashed on any surface of the machine, it should be neutralized and rinsed with clean water.

CAUTION! Do not overcharge the battery. Overcharging may reduce the overall service life of the battery.

CAUTION! Be sure the battery is fully charged before transporting the sawmill. If the battery is not fully charged, excessive vibration could reduce the overall service life of the battery.

[1] Battery Council International, copyright 1987

CAUTIONS FOR SAWMILL SETUP

WARNING! Do not set up the mill on ground with more than a 10 degree incline. If setup on an incline is necessary, put blocks under one side of the mill or dig out areas for the outrigger legs to keep mill level. Setting up the mill on an incline could cause it to tip over, resulting in serious personal injury.

WARNING! Chock the trailer wheels to prevent movement before unhitching it from the towing vehicle. Failure to do so may result in serious injury or death.

WARNING! Put front outrigger down before moving saw head from the rest position. Failure to do so may result in serious injury.

WARNING! Always make sure the trailer is supporting the sawmill frame when operating a sawmill with adjustable outriggers. Failure to do so may result in serious injury or death. The adjustable outriggers are intended to support the saw frame with assistance from the trailer.

WARNING! The adjustable outriggers supplied with portable sawmills are not intended for setup on concrete or other hard surfaces. Long-term use of the adjustable outriggers on hard surfaces may cause the outriggers to fail, causing the sawmill to drop. This could result in possible serious injury or death.

If setting the sawmill up on concrete or other hard surface, replace the adjustable outrgger legs with stationary legs.

WARNING! Securely fasten the feet of a stationary sawmill to the floor before operating the sawmill. Failure to do so may result in serious injury or death.

CHECK SAWMILL BEFORE OPERATION

DANGER! Make sure all guards and covers are in place and secured before operating or towing the sawmill. Failure to do so may result in serious injury.

Be sure the blade housing and pulley covers are in place and secure. Use the safety retainer pin and cable to fasten blade housing covers.

WARNING! Use both hands to operate the blade tensioner handle. Be sure the handle lock engages (flips down) after tensioning the blade. Failure to do so may result in injury.

KEEP PERSONS AWAY

DANGER! Stay clear of the area between the trailer axle and saw carriage. Failure to do so will result in serious injury.

DANGER! Keep all persons out of the path of moving equipment and logs when operating sawmill or loading and turning logs. Failure to do so will result in serious injury.

DANGER! Always be sure the blade is disengaged and all persons are out of the path of the blade before starting the engine or motor. Failure to do so will result in serious injury.

KEEP HANDS AWAY

DANGER! Always disengage the blade and shut off the sawmill engine before changing the blade. Failure to do so will result in serious injury.

DANGER! Engine components can become very hot during operation. Avoid contact with any part of a hot engine. The exhaust components of your engine are especially hot during and following operation. Contact with hot engine components can cause serious burns. Therefore, never touch or perform service functions on a hot engine. Allow the engine to cool sufficiently before beginning any service function.

DANGER! Always keep hands away from moving bandsaw blade. Failure to do so will result in serious injury.

DANGER! Always be aware of and take proper protective measures against rotating shafts, pulleys, fans, etc. Always stay a safe distance from rotating members and make sure that loose clothing or long hair does not engage rotating members resulting in possible injury.

WARNING! Do not spin the blade wheels by hand. Spinning the blade wheels by hand may result in serious injury.

WARNING! Always disengage the clutch/brake mechanism whenever the sawmill is not cutting. Failure to do so may result in serious injury.

WARNING! Do not for any reason adjust the engine drive belt with the engine running. Doing so may result in serious injury.

WARNING! Always keep clear of exiting sawdust. Keep hands, feet and any other objects away from the sawdust chute when operating sawmill. Failure to do so may result in serious injury.

CAUTIONS FOR GAS OR DIESEL ENGINE OPERATION

DANGER! Operate your engine/machine only in well ventilated areas. The exhaust gases of your engine can cause nausea, delirium and potentially death unless adequate ventilation is present.

DANGER! Never operate an engine with a fuel or oil leak. The leaking fuel or oil could potentially come in contact with hot surfaces and ignite into flames.

WARNING! Do not operate engine without proper and operational spark arrester/muffler. Sparks emitted from the engine exhaust could ignite surrounding materials, causing serious injury or death.

USE PROPER PROCEDURE WHEN CONDUCTING ELECTRICAL SAFETY CHECKS AND MAINTENANCE

DANGER! Make sure all electrical installation, service and/or maintenance work is performed by a qualified electrician and is in accordance with applicable electrical codes.

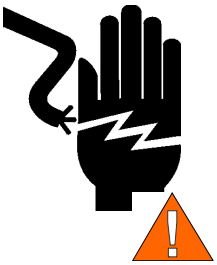

DANGER! ARC FLASH AND SHOCK HAZARD! Hazardous voltage inside the electric sawmill disconnect box, starter box, and at the motor can cause shock, burns, or death. Disconnect and lock out power supply before servicing! Keep all electrical component covers closed and securely fastened during mill operation. Wear appropriate Personal Protection Equipment.

WARNING! Consider all electrical circuits energized and dangerous.

WARNING! Disconnect the negative battery terminal cable before performing any service to the 12-Volt electrical system. Failure to do so may result in injury and/or electrical system damage.

WARNING! Never assume or take the word of another person that the power is off; check it out and lock it out.

WARNING! Do not wear rings, watches, or other jewelry while working around an open electrical circuit.

WARNING! Before performing service near moving parts such as blades, pulleys, motors, belts and chains, first turn the key switch to the OFF (#0) position and remove the key. If the key is turned on and moving parts activated, serious injury may result.

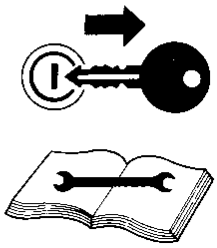

WARNING! Remove the blade before performing any service to the engine or sawmill. Failure to do so may result in serious injury.

DANGER! Lockout procedures must be used during:

Changing or adjusting blades
Unjamming operations
Cleaning
Mechanical repair
Electrical maintenance
Retrieval of tools/parts from work area
Activities where guards or electrical panel guard is open or removed

Maintenance hazards include:

Blade contact
Pinch points
Kickbacks
Missiles (thrown blades/wood chips)
Electrical

Failure to lockout may result in:

Cut
Crush
Blindness
Puncture
Serious injury and death
Amputation
Burn
Shock
Electrocution

To control maintenance dangers:

Lockout procedures must be followed (see ANSI Standard Z244.1-1982 and OSHA regulation 1910.147).
Never rely on machine stop control for maintenance safety (emergency stops, on/off buttons, interlocks).
Do not reach into moving blades or feed systems. Allow all coasting parts to come to a complete stop.
Electrical power supply and air supply must both be locked out.
Where established lockout procedures cannot be used (electrical troubleshooting or mechanical dynamic troubleshooting), alternative effective protective techniques shall be employed which may require special skills and planning.
Always follow safe operations practices in the workplace.

SAWMILL LOCKOUT PROCEDURE

Lockout procedures must be followed (see ANSI Standard Z244.1-1982 and OSHA regulation 1910.147).

Purpose:

This procedure establishes the minimum requirements for lockout of energy sources that could cause injury.

Responsibility:

The responsibility for seeing that this procedure is followed is binding upon all workers. All workers shall be instructed in the safety significance of the lockout procedure. It is your responsibility to ensure safe operation of the machine.

Preparation For Lockout:

Sawmill must be locked out both electrically and pneumatically (lockout air valve).

Sequence of Lockout Procedure:

1. Notify all persons that a lockout is required and the reason therefore.
2. If the Sawmill is operating, shut it down by the normal stopping procedure.
3. Operate the switch and valve so that the energy sources are disconnected or isolated from the Sawmill. Stored energy such as moving blades, feed system and air pressure shall be dissipated.
4. Lockout the energy isolating devices with assigned individual locks.
5. After ensuring that no persons are exposed and as a check on having disconnected the energy sources, operate the push button or other normal operating controls to make certain the Sawmill will not operate. Caution: Return operating controls to neutral position after the test.
6. The Sawmill is now locked out.

Restoring Equipment to Service

1. When the job is complete and the Sawmill is ready for testing or normal service, check the Sawmill area to see that no one is exposed.

2. When the Sawmill is all clear, remove all locks. The energy isolating devices may be operated to restore energy to the Sawmill.

Procedure Involving More Than One Person

In the preceding steps, if more than one individual is required to lock out the Sawmill, each shall place his own personal lock on the energy isolating devices.

Rules for Using Lockout Procedure

The Sawmill shall be locked out to protect against accidental or inadvertent operation when such operation could cause injury to personnel. Do not attempt to operate any switch or valve bearing a lock.

Owner's Responsibility

The procedures listed in this manual may not include all ANSI, OSHA, or locally required safety procedures. It is the owner/operator's responsibility and not Wood-Mizer Products to ensure all operators are properly trained and informed of all safety protocols. Owner/Operators are responsible for following all safety procedures when operating and performing maintenance to the Sawmill.

KEEP SAFETY LABELS IN GOOD CONDITION

IMPORTANT! Always be sure that all safety decals are clean and readable. Replace all damaged safety decals to prevent personal injury or damage to the equipment. Contact your local distributor, or call your Customer Service Representative to order more decals.

IMPORTANT! If replacing a component which has a safety decal affixed to it, make sure the new component also has the safety decal affixed.

USE CAUTION WHEN WORKING WITH HEAVY LOGS

WARNING! Always make sure log is clamped securely before sawing. Failure to do so may result in serious injury or death.

UP/DOWN SYSTEM SAFETY

WARNING! Always secure the saw head with a 5/16" chain with at least 1900 lbs. working load capacity before adjusting the up/down chain. The saw head may fall, causing severe injury or death.

WARNING! Always secure the saw head with a 5/16" chain with at least 1900 lbs. working load capacity before adjusting the mast pads. The saw head may fall, causing severe injury or death.

WARNING! Always secure the saw head with a 5/16" chain with at least 1900 lbs. working load capacity before servicing the up/down assist. The cutting head may fall, causing severe injury or death.

WARNING! Release pressure from the up/down assist prior to performing any service to the assembly. Failure to do so may result in the assembly flying apart, causing injury or damage to the equipment.

WARNING! The gas spring cylinders are pressurized. Disassembly of cylinder may result in injury or damage to the cylinder.

POWER FEED SYSTEM SAFETY

DANGER! If leaving the blade engaged for maximum production rates, make sure the off-bearer stays out of the path of the blade. Failure to do so will result in serious injury or death.

WARNING! Be sure the power feed switch is in the neutral position before turning the key switch to the on (#1) or accessory (#3) position. This prevents accidental carriage movement which may cause serious injury or death.

GENERAL TRAILER SAFETY

DANGER! Make sure your hitch has adequate safety chain hook-ups. Do not use eyebolts for safety chain hook-up. Safety chains should be hooked to bumper of vehicle so that each chain would pull the trailer equally in the event the hitch became disengaged. Failure to do so may result in serious personal injury and/or severe machine damage.

DANGER! Be sure that the hitch and safety chains are secure before towing the sawmill. Failure to do so may result in serious personal injury and/or severe machine damage.

DANGER! Make sure all light connections have been made and are working properly before towing the sawmill. Failure to do so may result in serious personal injury and/or severe machine damage.

WARNING! The trailer option is designed for the express purpose of towing the sawmill it is supplied with. Do not make modifications or additions that affect the weight and/or stability of the towing unit. Doing so may result in property damage and/or serious injury or death.

WARNING! Always check trailer tires for proper inflation before towing sawmill. Failure to do so may lead to tire failure resulting in property damage and/or serious injury or death.

SECTION 3 SAWMILL SETUP

3.1 Stationary Sawmill Setup

Prepare a firm, level area where the sawmill can be anchored. There should be enough room around the sawmill for operators, sawdust removal, log loading and board removal. A cement pad with 5/8” diameter anchor bolts is recommended. The cement pad should be rated to support 6350 lbs./sq.ft. at each sawmill foot position.

See Form #847 for stationary sawmill foot anchor locations.

NOTE: Make sure the unit is level before securing. It IS possible to twist the mill frame by jacking one foot higher than the others.

WARNING! Securely fasten the feet of a stationary sawmill to the floor before operating the sawmill. Failure to do so may result in serious injury or death.

3. Use the up/down crank to raise the cutting head from the carriage rest pin. Swing the rest pin down below bed level.

4. Use the feed handle to move the cutting head toward the front end of the mill.

5. Raise the side supports to prevent a log from falling off the side of the mill when loaded.

See Figure 3-1.

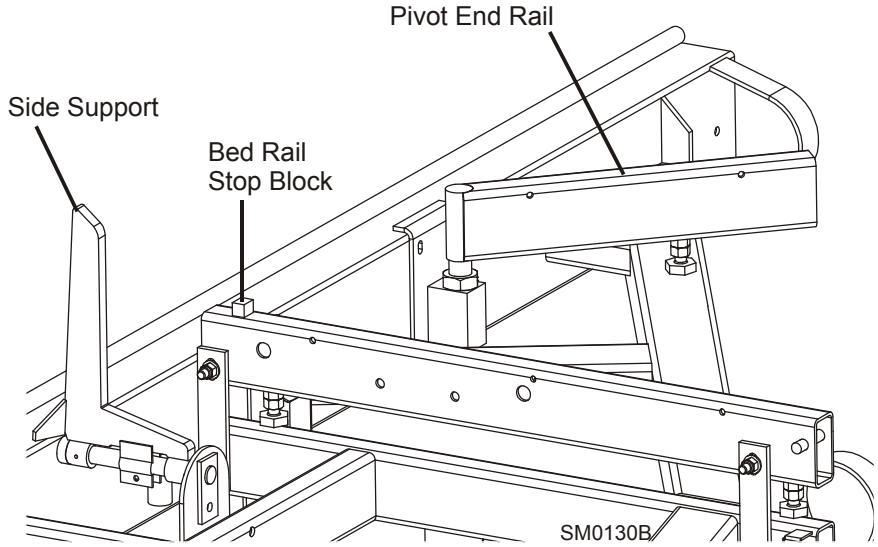

FIG. 3-1

3.2 Portable Sawmill Setup

WARNING! Do not set up the mill on ground with more than a 10 degree incline. If setup on an incline is necessary, put blocks under one side of the mill or dig out areas for outrigger legs to keep mill level. Setting up the mill on an incline could cause it to tip over, resulting in serious personal injury.

WARNING! Chock the trailer wheels to prevent movement before unhitching it from the towing vehicle. Failure to do so may result in serious injury or death.

WARNING! Always make sure the trailer is supporting the sawmill frame when operating a sawmill with adjustable outriggers. Failure to do so may result in serious injury or death. The adjustable outriggers are intended to support the saw frame with assistance from the trailer.

WARNING! The adjustable outriggers supplied with portable sawmills are not intended for setup on concrete or other hard surfaces. Long-term use of the adjustable outriggers on hard surfaces may cause the outriggers to fail, causing the sawmill to drop. This could result in possible serious injury or death.

If setting the sawmill up on concrete or other hard surface, replace the adjustable outrgger legs with stationary legs.

1. Unhitch the mill from the vehicle.

2. Lower and set the front three outriggers. To lower, use the provided jack handle to lift the weight from the locking pin. If necessary, rotate the locking pin counterclockwise so that the inner roll pin is free from the outrigger channel notch, then pull the locking pin out to release the outrigger. Lower the outrigger as necessary. Push the locking pin back in and turn clockwise until the inner roll pin is behind the outrigger channel notch to “lock” the outrigger in place.

WARNING! Put front outrigger down before moving cutting head from the rest position. Failure to do so may result in serious injury.

See Figure 3-2.

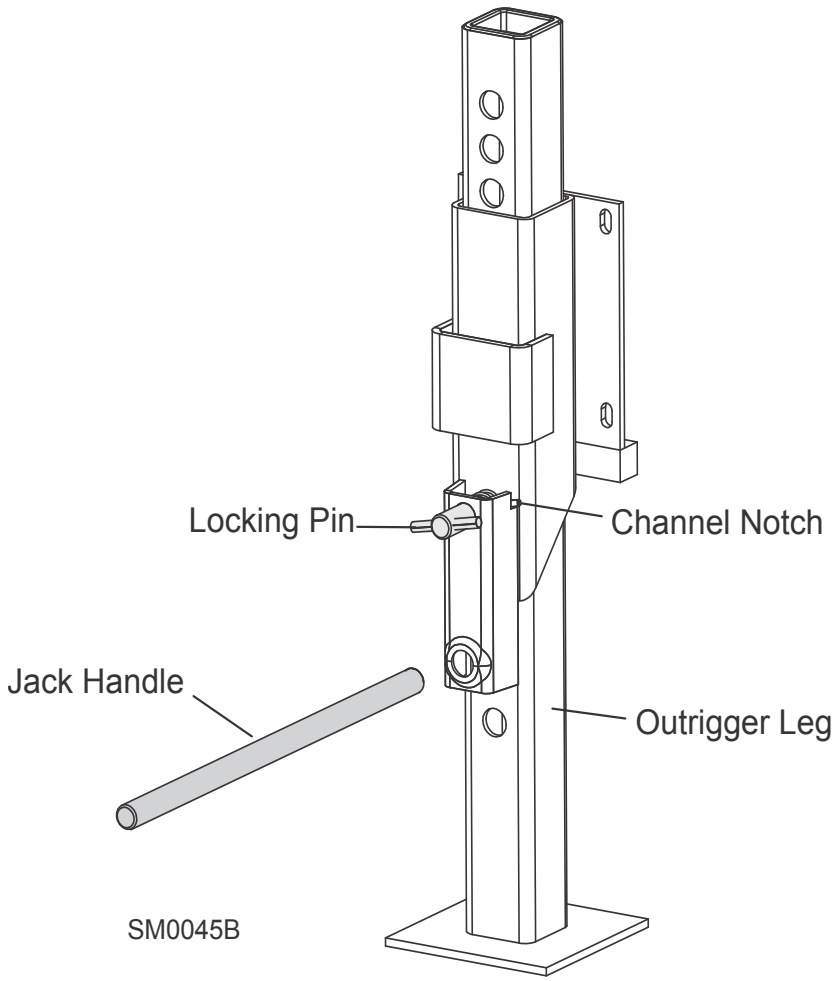

FIG. 3-2. OUTRIGGER ADJUSTMENT.

See Figure 3-3. For Fine Adjust Outriggers (FAOs), lower the outrigger as close to the ground as possible, then secure in place with the locking pin. Adjust the outrigger base so that it contacts the ground. To adjust, use the provided wrench to turn the height adjustment nut. Turn clockwise to lower. Turn counterclockwise to raise. Maximum adjustment available is 1 1/2” (3.8 cm).

CAUTION! Do not adjust the FAO outrigger base height while there is weight on the FAO. Damage to the FAO may result.

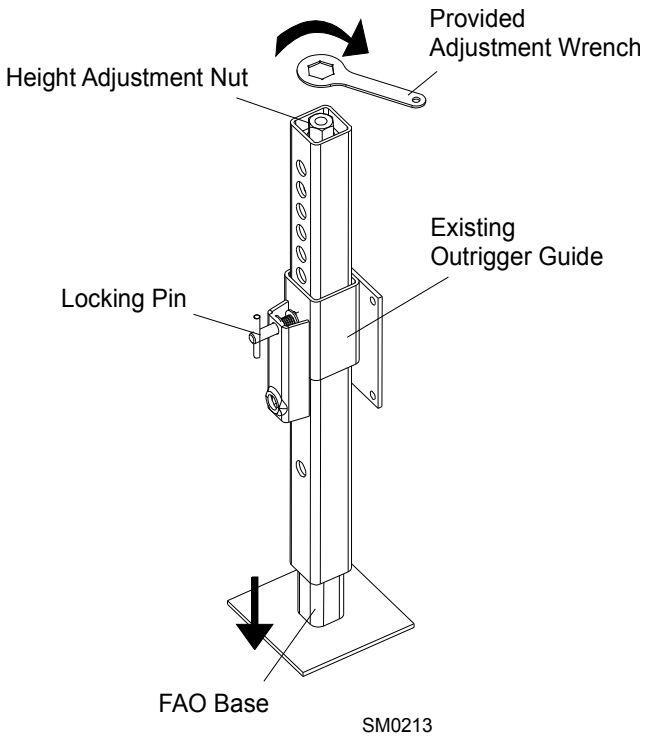

FIG. 3-3. BASE HEIGHT ADJUSTMENT (FOR FINE ADJUST OUTRIGGER ONLY).

3. Use the up/down crank to raise the cutting head from the carriage rest pin. Swing the rest pin down below bed level.

4. Remove the fenders by lifting them out of the slots.

CAUTION! To prevent fender damage, remove fenders before operating sawmill or loading logs.

5. Use the feed handle to move the cutting head toward the front end of the mill.

6. Lower and set the remaining rear outriggers. Level the sawmill by adjusting the outriggers to raise or lower each end of the sawmill. Adjust all outriggers evenly to avoid twisting the

mill frame by jacking one outrigger higher than the others.

For FAO(s), fine tune the outrigger base height as necessary. Move the cutting head to the opposite end of the mill from the outrigger. Raise the entire outrigger (to remove the sawmill weight from it) and adjust the outrigger base as necessary. Lower the entire outrigger and use the locking pin to secure in position.

CAUTION! Do not adjust the FAO outrigger base height while there is weight on the FAO. Damage to the FAO may result.

7. Raise the two side supports to prevent the log from falling off the side of the mill when loaded.

See Figure 3-4.

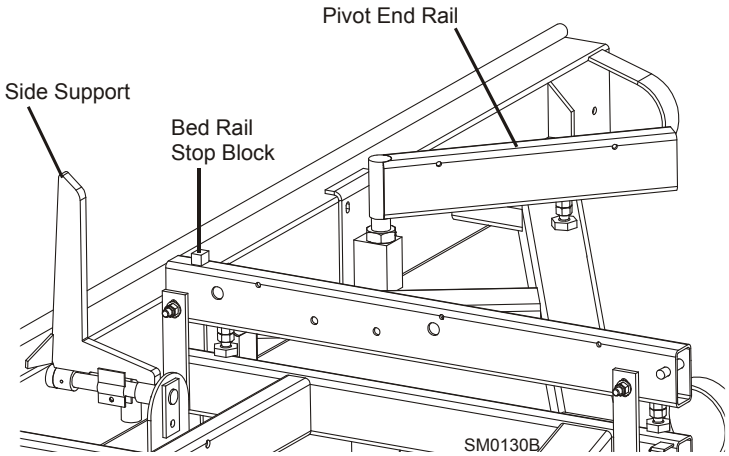

FIG. 3-4

3.3 Replacing The Blade

DANGER! Always disengage the blade and shut off the sawmill engine before changing the blade. Failure to do so will result in serious injury.

WARNING! Always wear gloves and eye protection when handling bandsaw blades. Changing blades is safest when done by one person! Keep all other persons away from area when coiling, carrying or changing a blade. Failure to do so may result in serious injury.

Adjust the blade guide arm all the way open.

Open the two blade housing covers that cover the blade wheels. Turn the blade tension handle to release the blade tension until the wheel is pulled in and the blade is lying loose in the blade housing. Lift the blade out of the blade housing.

When installing a blade, make sure the teeth are pointing the correct direction. The teeth should be pointing toward the operator side of the mill when you are looking at the blade below the blade guides. Install the blade so it is lying around the wheels.

Position 1 1/4” wide blades on the wheels so the gullet is 1/8" (3.0 mm) out from the edge of the wheel.

Close the blade housing covers.

Next, turn the tension handle until the blade is tensioned correctly.

3.4 Tensioning The Blade

The blade tensioner is factory-set so proper blade tension is achieved when the rubber spring is compressed 3/16” (4.8 mm). An indicator bolt is provided to indicate when the rubber spring has been compressed properly. To tension the blade, turn the blade tension handle up until it locks in place.

WARNING! Use both hands to operate the blade tensioner handle. Failure to do so may result in injury.

Check the back side of the rubber spring washer is aligned with the indicator bolt head. If not, release the blade tension and turn the tensioner shaft counterclockwise to compress the rubber spring more; clockwise to compress the rubber spring less.

See Figure 3-5. Rev. A2.00+: Use the scalloped disk to turn the tensioner shaft.

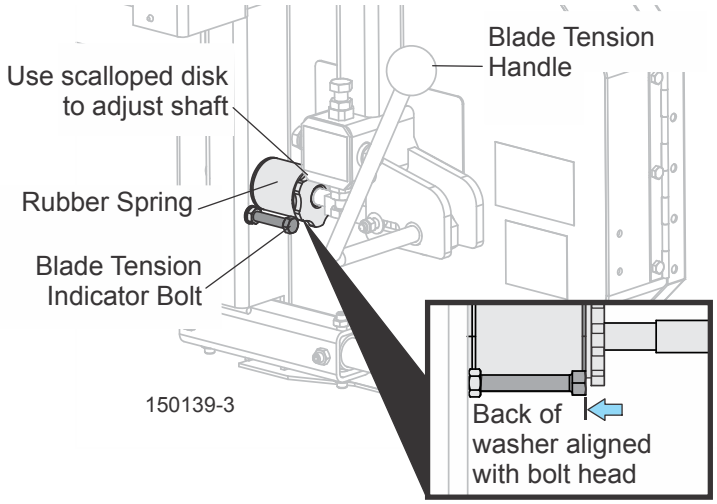

FIG. 3-5

See Figure 3-6. Rev. A1.00 - A1.02: Use the roll pin at the end of the assembly to turn the shaft.

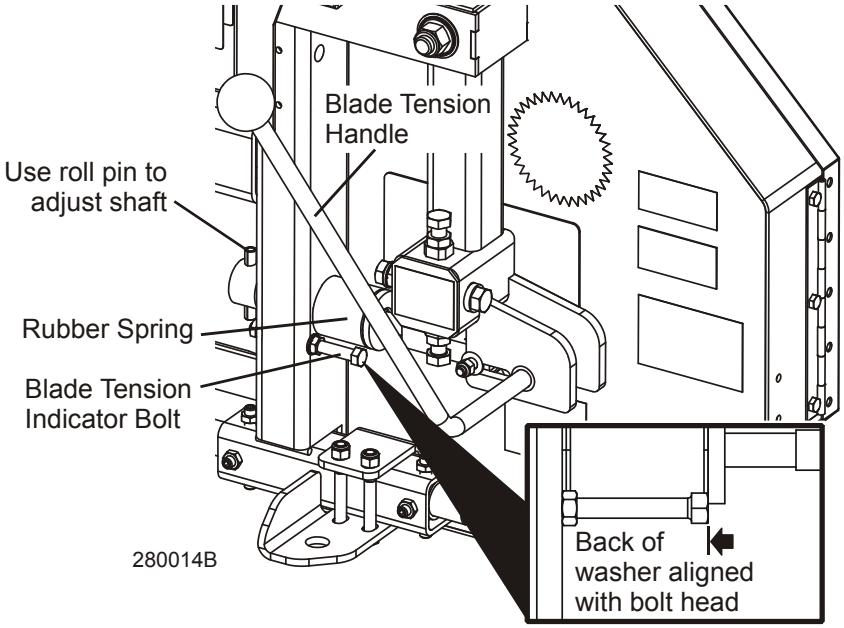

FIG. 3-6

Tension the blade and recheck the alignment of the rubber spring washer with the indicator bolt head.

Check the blade tension occasionally when adjusting the cant control or while cutting. As the blade and belts heat up and stretch, the blade tension will change. Adjust the tensioner shaft as necessary to maintain proper blade tension.

3.5 Tracking The Blade

1. Make sure the blade housing covers are closed and all persons are clear of the open side of the saw head.

2. Start the engine.

3. Engage the blade, rotating the blade until the blade positions itself on the wheels.

   WARNING! Do not spin the blade wheels by hand. Spinning the blade wheels by hand may result in serious injury.

4. Disengage the blade. Turn off the engine, remove the key and check the position of the blade on the blade wheels.

   See Figure 3-7. Position 1 1/4” wide blades so the gullet is 1/8" (3.0 mm) out from the edge of the blade wheel (±1/32 [.75 mm]).

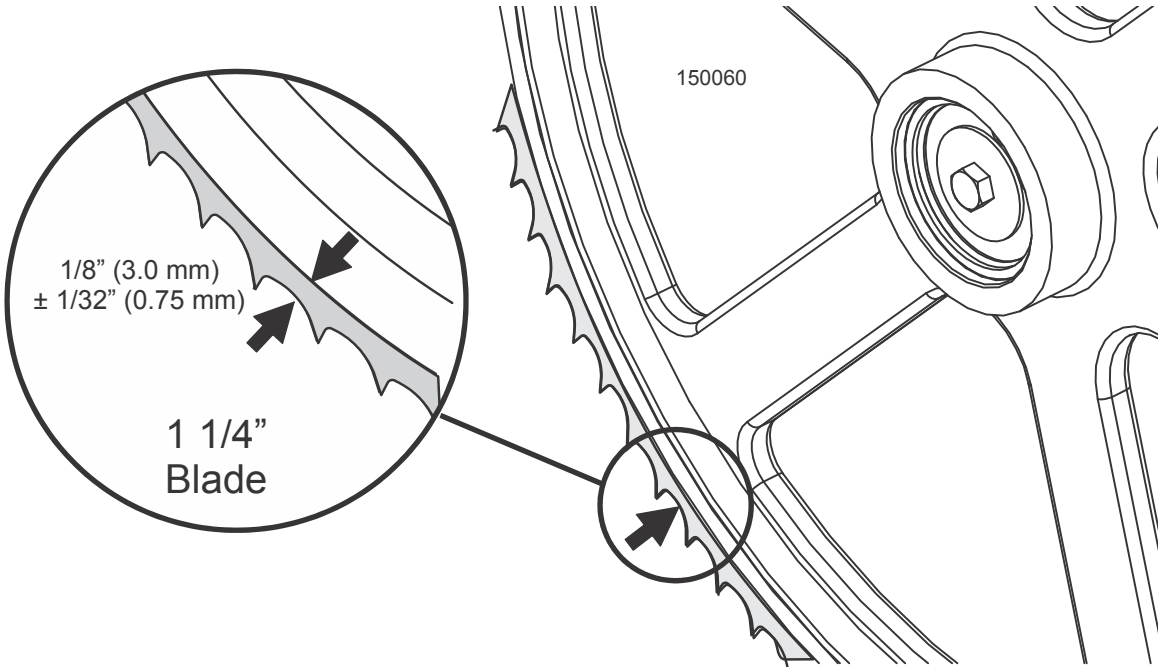

FIG. 3-7

See Figure 3-8. To adjust where the blade travels on the blade wheels, use the cant control.

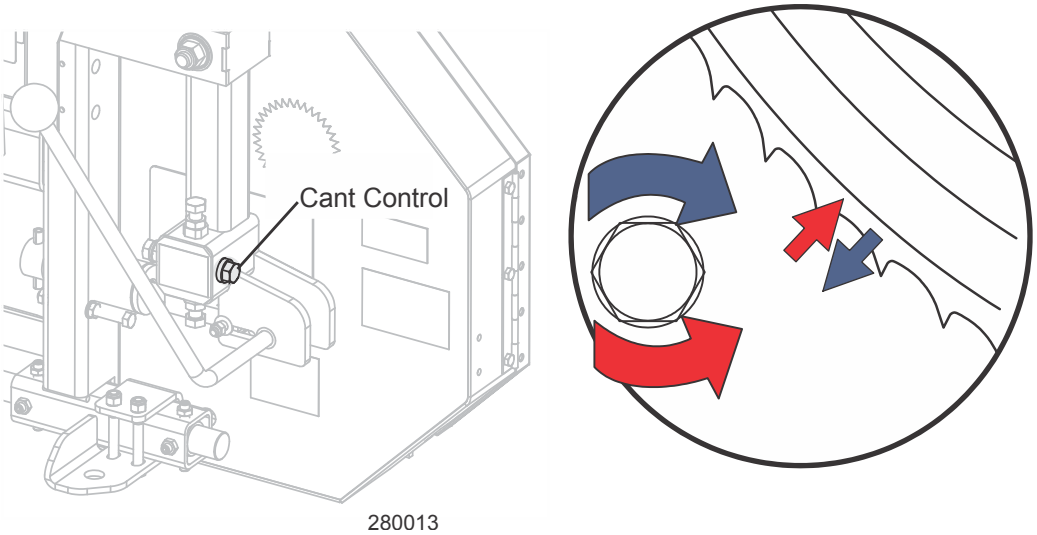

FIG. 3-8

If the blade is too far out, back the blade onto the wheel by turning the cant control counterclockwise. If the blade is too far in, turn the cant control clockwise until the gullet of the blade is the correct distance from the front edge of the wheel.

5. Adjust the blade tension if necessary to compensate for any changes that may have occured while adjusting the cant control.

6. Close the blade housing covers.

DANGER! Make sure all guards and covers are in place and secured before operating or towing the sawmill. Failure to do so may result in serious injury. Be sure the blade housing and pulley covers are in place and secure.

IMPORTANT! After aligning the blade on the wheels, always double-check the blade guide spacing and location. (*See Section 7* for more information.)

3.6 Starting The Engine

See the appropriate manual supplied with your specific engine/motor configuration for starting and operating instructions.

DANGER! Make sure all guards and covers are in place and secured before operating or towing the sawmill. Failure to do so may result in serious injury. Be sure the blade housing and pulley covers are in place and secure.

DANGER! Always be sure the blade is disengaged and all persons are out of the path of the blade before starting the engine or motor. Failure to do so will result in serious injury.

WARNING! Always wear eye, ear, respiration, and foot protection when operating the sawmill. Failure to do so may result in serious injury.

SECTION 4 SAWMILL OPERATION

4.1 Loading, Turning And Clamping Logs

To Load Logs

1. Move the saw carriage to the front end of the frame.

CAUTION! Before loading a log, be sure the cutting head is moved far enough forward so the log does not hit it. Failure to do so may result in machine damage.

CAUTION! Be sure the log clamp, pivot rails, turning arm and toe boards are adjusted out of the path of the log before loading a log onto the bed. Failure to do so may result in machine damage or cause misalignment.

2. Raise the side supports on the sawmill bed to prevent the log from falling off the side of the bed.

3. Place the loading ramps on the two bed rails that will support the length of the log. **NOTE:** The loading ramps cannot be fastened securely to the bed rail located directly above the tire. Do not use this rail.

4. Position the log at the foot of the ramps.

5. Remove the winch cable from the log turner (if applicable) and route the cable over the top of the log. Wrap the cable around and underneath the log. Hook the cable to the third hole in the log clamp bracket. See *Winch Operation Manual*.

DANGER! Keep all persons out of the path of moving equipment and logs when operating sawmill or loading and turning logs. Failure to do so will result in serious injury.

6. Crank the winch to begin rolling the log up the ramps and onto the sawmill bed. Keep the log centered on the ramps as it rolls up.

7. Once the log is on the sawmill bed, place the log clamp in the clamp bracket. This will stop the log from rolling back off the side of the mill when you remove the winch cable.

NOTE: Logs also may be loaded onto the mill with a tractor or other equipment specifically designed for that purpose.

To Turn Logs

1. Use cant hooks or the optional log turner to rotate the log on the sawmill bed. See *Log Turner Manual*.

2. Spin the log against the side supports until it is turned the way you want it for the first cut.

To Clamp Logs

1. Position the log clamp in the bracket in the hole closest to the log.

2. Move the clamp down far enough so that it is below your first few cuts. Pivot the clamp so that it moves the log firmly against the side supports. Lock the clamp in position with the locking chain.

See Figure 4-1.

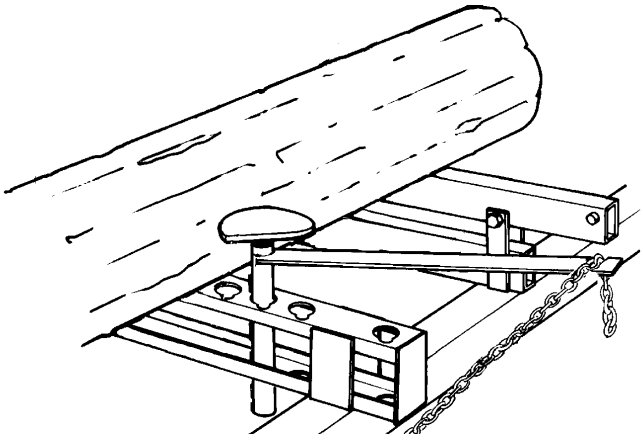

FIG. 4-1

3. Make sure the side supports are positioned low enough for the blade to pass over them. If they are not, back the clamp off slightly and push the side supports down until they are positioned below the level of your first few cuts.

4. Use the optional toe boards to level the log if desired. See the manual supplied with the manual toe boards for details concerning toe board operation.

To Level A Tapered Log

Use the optional toe boards to raise either end of a tapered log, if desired. See the Toe Board Option Manual for operating instructions.Start the engine as described in your engine option manual.

4.2 Up/Down Operation

1. Install a blade, if needed, and check for correct blade tension. (*See Section 3.3*).

2. Set the cutting head to the desired height. (The blade height scale shows the height of the blade above the bed rails.)

   See Figure 4-2. Use the up/down crank to raise or lower the cutting head. Press the lock release handle and turn the crank clockwise to lower the saw head or counterclockwise to raise the saw head. Each notch in the crank wheel will move the blade 1/16”. A complete revolution of the wheel is 4”. Release the lock release to lock the saw head in place.

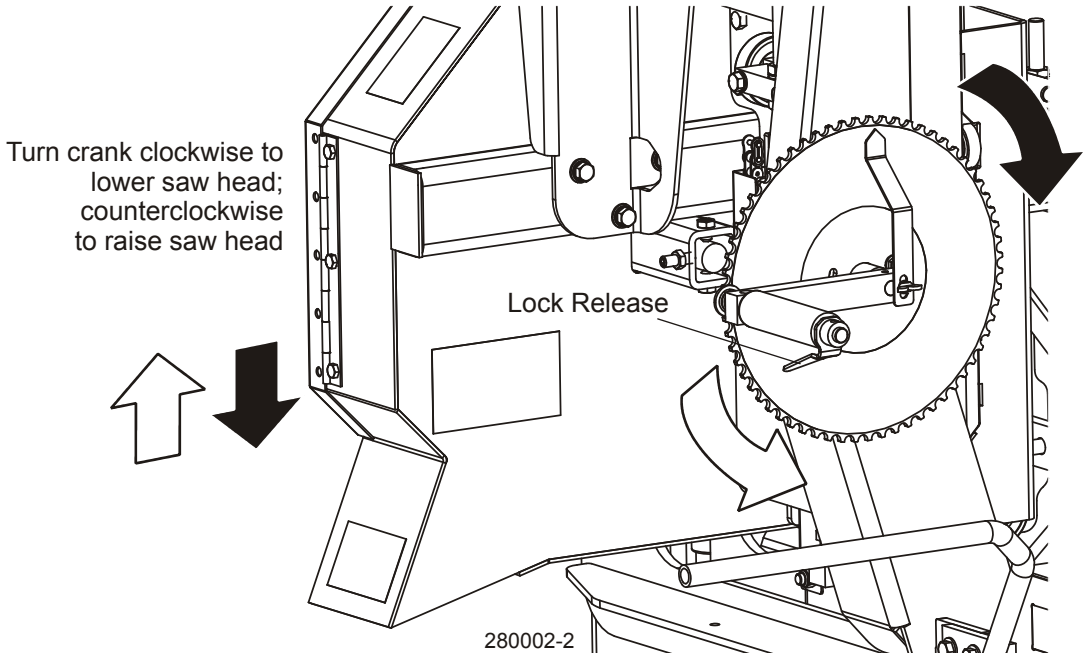

FIG. 4-2

CAUTION! DO NOT try to force the carriage above the 27" (68 cm) mark or below the 1" (2.54 cm) mark. Damage to the up/down system may result.

4.3 Blade Guide Arm Operation

1. Look down the length of the log to see its maximum width. The outer blade guide should be adjusted to clear the widest section of the log by less than 1" (25.4 mm).

   See Figure 4-3. Use the blade guide arm lever to adjust the outer blade guide as necessary. Pull the lever toward you to move the arm in. Push the lever away from you to move the arm out.

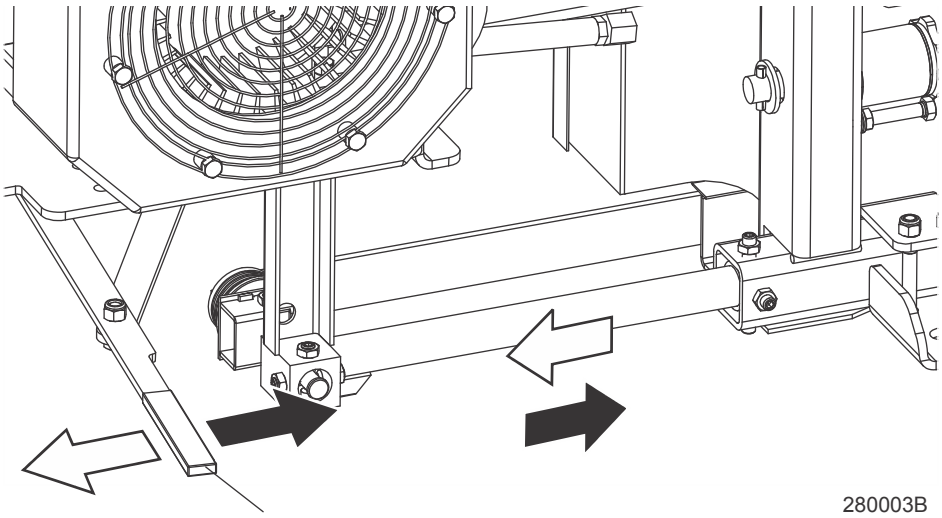

Pull lever to move blade guide arm in; Push lever to move blade guide arm out

4.4 Clutch Operation

1. Clear any loose objects from the area of the blade, motor, and drive belt.

2. Make sure the clamp and side supports are adjusted below the level of your first few cuts.

3. Start the engine as instructed in the option manual.

DANGER! Keep all persons out of the path of moving equipment and logs when operating sawmill or loading and turning logs. Failure to do so will result in serious injury.

Be sure the blade housing and pulley covers are in place and secure before starting the engine or motor. Use the rubber latches to fasten the blade housing covers shut.

See Figure 4-4. The clutch lever is located next to the engine.

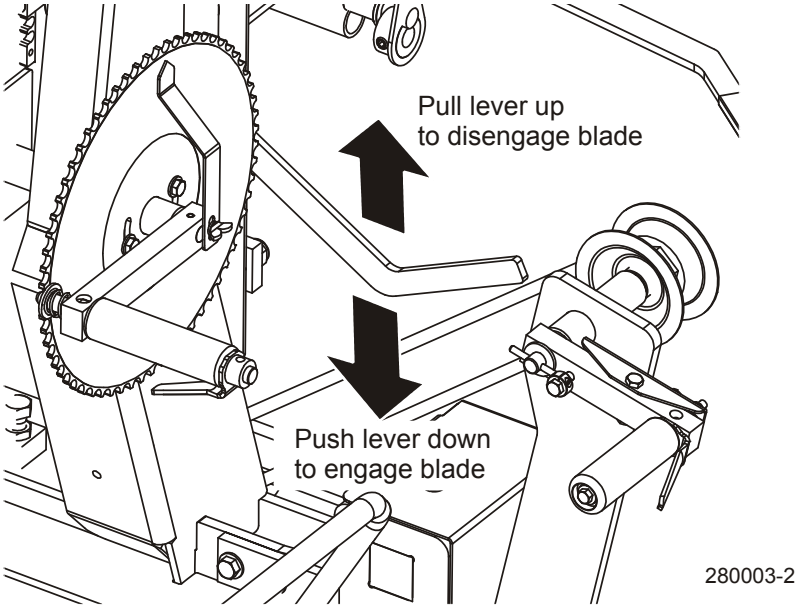

FIG. 4-4

4. To engage the blade, pull the clutch lever down until it locks in the down position. This engages the drive mechanism, releases the blade brake, and increases the engine speed to full throttle.

5. To disengage the blade, raise the clutch lever to the up position. This disengages the drive belt, engages the blade brake, and returns the engine to idle.

4.5 Feed Operation

STANDARD MANUAL FEED:

1. Use the feed crank handle to move the saw carriage forward.

   See Figure 4-5. Squeeze the engagement lever and rotate the feed crank clockwise.

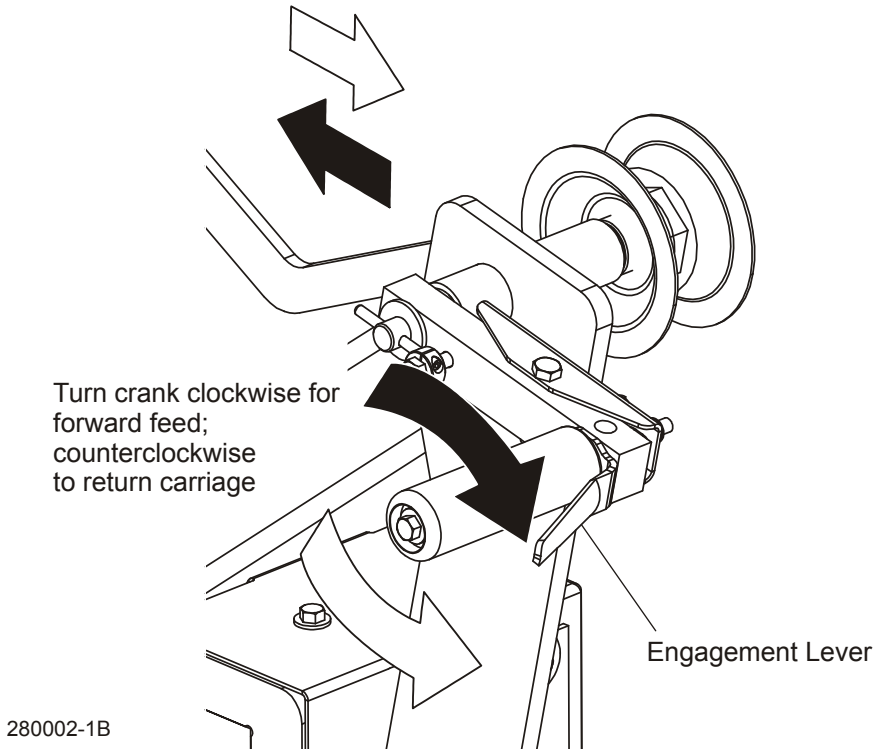

FIG. 4-5

OPTIONAL POWER FEED:

See Figure 4-6. The power feed system moves the carriage forward and backward by using two switches on the control panel.

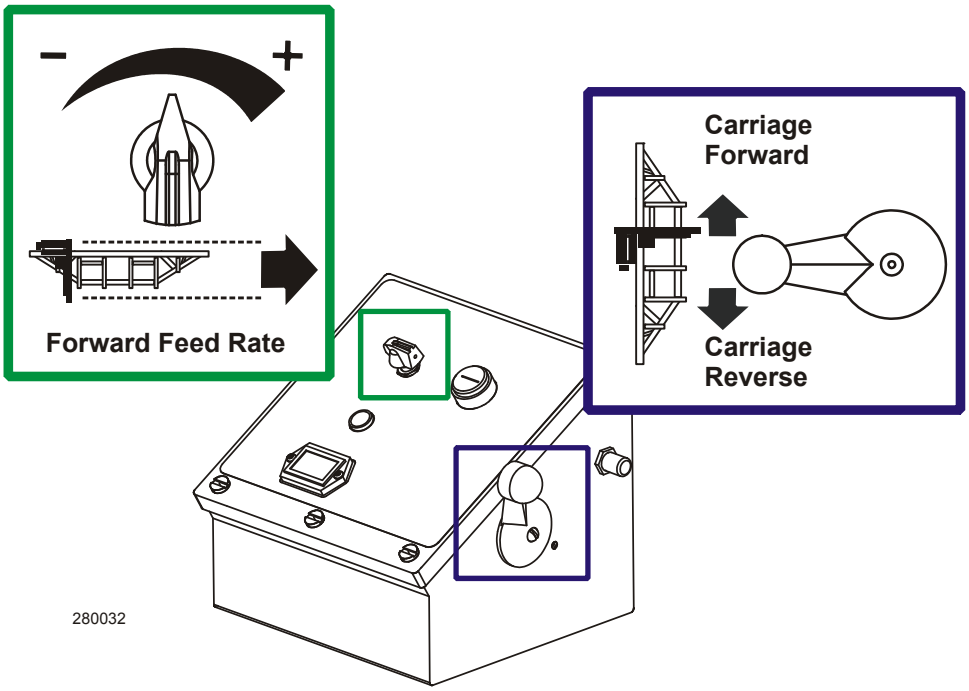

FIG. 4-6

Carriage Feed Rate

The carriage feed rate switch controls the speed at which the carriage travels forward. Turn the switch clockwise to increase speed. Turn it counterclockwise to reduce speed.

Carriage Forward and Reverse

The carriage forward/reverse switch controls the direction in which the carriage travels. Turn the forward/reverse switch upward to move the carriage forward. Turn the switch down to move the carriage backward.

The middle position (as shown) is the neutral position. The power feed switch is designed to return to the neutral or "off" position when released from operating in the reverse position. If the switch remains engaged, manually move the switch to the neutral or "off" position. Repair the drum switch (*See Section 5.6*).

WARNING! Be sure the power feed switch is in the neutral position before turning the key switch to the on (#1) or accessory (#3) position. This prevents accidental carriage movement which may cause serious injury or death.

HINT: To get a straight cut in the first part of the board, feed the blade into the log at a slow speed. This stops the blade from flexing and dipping up or down. Use a slow speed until the whole width of the blade has entered the cut. Then increase the feed rate as

desired. Maximum feed rate varies with width and hardness of the wood. Over-feeding results in engine and blade wear, and also produces a wavy cut.

2. Stop the carriage at the end of the cut. The blade will continue to spin as long as the blade motor is on. Use the optional sawing procedure described in Section 4.9.Throw the clutch lever up to stop the blade and drop the engine to idle. Remove the board from the top of the log. **Always disengage the blade before returning the carriage for the next cut.**

   CAUTION! Be sure to stop the blade when returning the carriage. This will not only prevent the blade from being pulled off and ruined by a wood sliver, but also will increase the life of the blade.

3. Make sure that the blade does not catch on the end of the log. Raise the carriage slightly to make sure the blade clears the log when returned.

4. To move the carriage backward, squeeze the engagment lever and rotate the feed crank clockwise or pull the saw head back using the carriage push/pull handle (**OPTIONAL POWER FEED:** Return the carriage to the front of the mill by pushing the drum switch handle down. The power feed motor will bypass the carriage feed rate switch and the carriage will automatically return at the fastest speed available.).

   HINT: Try to stop the blade while the heel of the blade is still on the log. Then bring the carriage back without adjusting the blade up. This lets you keep the blade at the current height setting so you can make the next blade height adjustment more quickly.

   DANGER! Stay clear of the area between the trailer axle and saw carriage. Failure to do so will result in serious injury.

4.6 Cutting The Log

The following steps guide you through normal operation of the Wood-Mizer sawmill.

1. Once the log is placed where you want it and clamped firmly, move the saw head to position the blade close to the end of the log.

2. Use the blade height scale to determine where to make your first cut (*See Section 4.8*). The blade height scale will help you to do this. Set the blade to the desired height with the up/down crank. Make sure that the blade will clear all side supports and the clamp. Adjust the outer blade guide to clear the widest section of the log by moving the blade guide lever.

3. Engage the clutch lever to start the blade spinning.

4. Start the water lube if necessary to prevent sap buildup on the blade. *See Section 4.9*.

5. Feed the blade into the log slowly *(See Section 4.5)*. Once the blade completely enters the log, increase the feed rate as desired. Always try to cut at the fastest speed you can while keeping an accurate cut. Cutting too slowly will waste blade life and lower production!

6. As you get to the end of the log, slow down the feed rate. When the teeth exit the end of the log, . Disengage the clutch lever. Remove the slab that you have just cut from the log.

7. Use the feed crank or the carriage push/pull handle to return the carriage to the front of the mill. Always disengage the blade before returning the carriage for the next cut.

8. Repeat until the first side of the log is cut as desired. Set aside the usable flitches (boards with bark on one or both sides). You can edge them on the mill later.

9. Lower the toe boards, if they were used. Remove the clamp and turn the log 90 or 180 degrees. Make sure the flat on the log is placed flat against side supports if turned 90 degrees. Make sure it is placed on bed rails if turned 180 degrees. If the log was turned 90 degrees and you are using toe boards to compensate for taper in the log, raise the front or rear toe board again on the second side of the log until the heart is parallel with the bed.

10. Repeat the steps used to cut the first side of the log until the log is square. Cut boards from the remaining cant by adjusting the blade height for the thickness of boards that you want.

Example: Remember that the blade cuts a 1/16 - 1/8" (1.6-3.2 mm) wide kerf. If you want 1" (25.4 mm) thick boards, lower the carriage 1 1/16 - 1 1/8" (27-28.6 mm) for each board.

4.7 Edging

The following steps guide you through edging boards on the Wood-Mizer sawmill.

1. Raise the side supports to 1/2 the height of the flitches, or the boards that need to be edged.

2. Stack the flitches on edge against the side supports.

3. Clamp the flitches against the side supports halfway up the flitch height. (Wider flitches should be placed to the clamp side. When they are edged, flip them over to edge the second side without disturbing the other flitches or without having to pull them from the middle of the stack).

4. Adjust the blade height to edge a few of the widest boards.

5. Loosen the clamp and turn the edged boards over to edge the other side.

6. Repeat steps 2-4.

7. Loosen the clamp and remove the boards that have good clean edges on both sides. Clamp the remaining flitches and repeat steps 2-5.

4.8 Blade Height Scale

See Figure 4-7. The blade height scale is attached to the carriage head frame. It includes:

- blade height indicator
- an inch scale
- a magnetic quarter scale

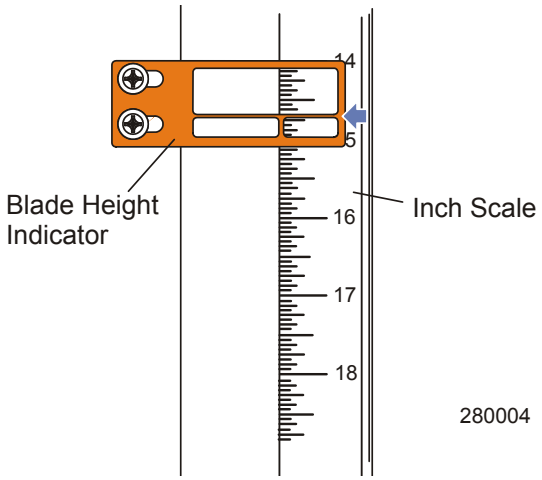

FIG. 4-7

The scales are attached to the frame and move up and down with the saw head. The blade indicator, used to read the inch and quarter scales, remains stationary.

The Inch Scale

The horizontal line on the blade height indicator shows how many inches the bottom of the blade is above the bed of the mill. If you know the height of your blade at each cut, you can determine the thickness of lumber you are sawing.

Example: You want to cut 1" (25 mm) random width boards from a log. Position the blade for the first cut. Move the carriage to an even measurement on the inch scale. Make a trim cut. Return the carriage for the second cut and lower it 1 1/8" (29 mm) below the original measurement. (The extra 1/8" (3 mm) allows for saw kerf and shrinkage of the lumber.)

The yellow area on the scale identifies where the blade could encounter a side support or log clamp. Check that these items are below the blade level before sawing.

The Quarter Scale

See Table 4-1. The magnetic quarter scale has four sets of marks. Each set represents a specific lumber thickness. Saw kerf and shrinkage allowance are included, but actual board thickness will vary slightly depending on blade thickness and tooth set.

Standard Quarter Scale	
Scale	**Actual Board Thickness**
4/4	1" (25 mm)
5/4	1 1/4" (32 mm)
6/4	1 1/2" (38 mm)
8/4	2" (51 mm)

TABLE 4-1

To use the quarter scale, look at the blade height indicator. Position the magnetic quarter scale over the inch scale. Align one of the quarter scale marks with the horizontal line on the indicator.

Make a trim cut. When you return the carriage for a second cut, lower the carriage to the next mark on the scale. This mark shows where the blade should be positioned to cut a certain thickness of lumber, without having to measure on the inch scale.

Example: You want to cut 1" (25 mm) (4/4) random width boards from a log. Position the blade for the first cut. Position the magneticquarter scale so a 4/4 mark is aligned with the line on the indicator. Make a trim cut. Return the carriage for the second cut. Now, instead of having to measure down 1 1/8" (29 mm) on the inch scale, you can simply lower the blade so the indicator is aligned with the next 4/4 mark on the quarter scale. Turn the log 90 degrees and repeat.

4.9 Water Lube Operation

The Water Lube System keeps the blade clean. Water flows from a 5-gallon (18.9 liter) bottle through a hose to the blade guide where the blade enters the log. A valve in the bottle cap controls the amount of water flow.

See Figure 4-8.

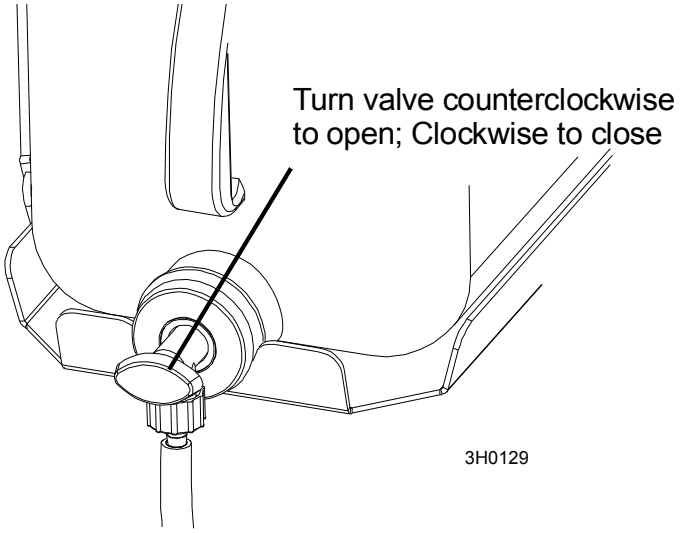

FIG. 4-8

Not all types of wood require the use of the Water Lube System. When it is needed, use just enough water to keep the blade clean. This saves water, and lowers the risk of staining the boards with water. Usual flow will be 1-2 gallons (3.8-7.6 liters) per hour.

Before removing the blade, engage the blade. Let the blade spin with water running on it for about 15 seconds. This will clean the blade of sap buildup. Wipe the blade dry with a rag before storing or sharpening.

For further lubrication benefits, add one 12oz. bottle of Wood-Mizer Lube Additive to 5 gallons of water. Wood-Mizer Lube Additive enables some previously impossible timbers to be cut by significantly reducing resin buildup on the blade. It helps to reduce heat buildup, wavy cuts, and blade noise. This biodegradable and environmentally friendly pre-mix includes a water softener additive, so it works with hard water.

WARNING! Use ONLY water and Wood-Mizer Lube Additive with the water lube accessory. Never use flammable fuels or liquids such as diesel fuel. If these types of liquids are necessary to clean the blade, remove it and clean with a rag. Failure to do so can damage the equipment and may result in serious injury or death.

If you are sawing in freezing temperatures, remove the water lube bottle from the sawmill when done sawing and store it in a warm place. Blow any remaining water from the water lube hose.

4.10 Preparing The Sawmill For Towing

The Wood-Mizer trailer package makes transporting your sawmill easy and convenient. To get your sawmill ready for towing, follow these instructions.

1. Move the saw carriage to the front end of the sawmill. Raise the rear outriggers.

   See Figure 4-9. For Fine Adjust Outriggers (FAOs), make sure the outrigger base is adjusted so that the grease fitting is just below the lowest outrigger hole before securing the FAO in position with the lock pin. This provides maximum ground clearance while preventing the lock pin from hitting the grease fitting.

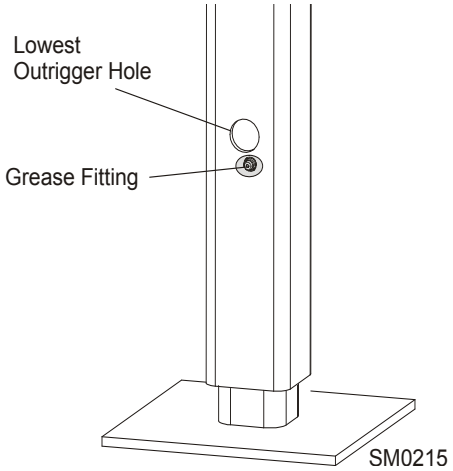

FIG. 4-9. FINE ADJUST OUTRIGGER ONLY.

CAUTION! Be sure the outrigger base is adjusted properly before securing the FAO in position with the lock pin. Failure to do so will cause damage to the outrigger grease fitting.

CAUTION! Do not adjust the FAO outrigger base height while there is weight on the FAO. Damage to the FAO may result.

2. Release the blade tension.

   CAUTION! Changes in temperature could cause increased pressure in the blade tensioner and loss of fluid from the gauge. Release the blade tension when the mill is not in use to avoid damage to the tensioner.

3. Move the carriage forward to the travel position over the rear bed rail.

4. Position the hole in the saw head over the travel rest pin.

5. Lower the saw head until it is seated firmly on the rest pin.

See Figure 4-10.

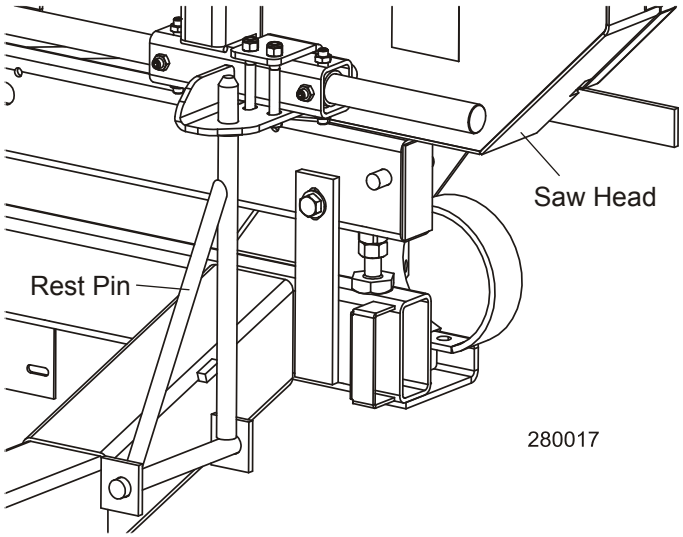

FIG. 4-10

6. Continue lowering the head 3/4" (19mm) until it contacts the stop blocks on the mast rails.

CAUTION! It is important that the lower stop bolts are properly adjusted to secure the carriage on the track rail. Failure to properly adjust the stop bolts can cause saw head damage, especially during mill transportation.

7. If necessary, adjust the two stops located at the bottom of the mast so the saw head contacts them after it is lowered 3/4" (19mm) past where it contacts the rest pin.

See Figure 4-11.

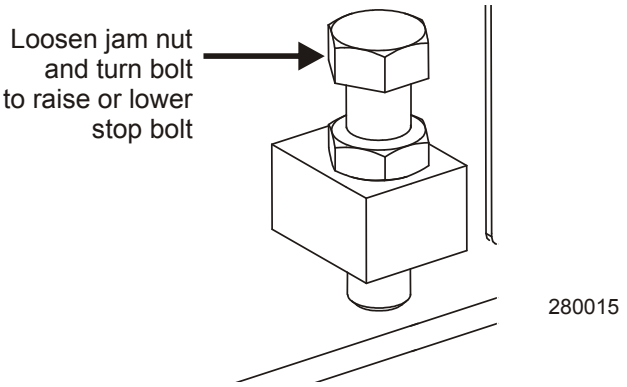

FIG. 4-11

8. Engage the clutch lever. This keeps the drive belt tight and the motor from bouncing while traveling. Be sure to disengage the clutch lever after reaching the destination to avoid deformation of the drive belt.

9. Hook the carriage safety chain located at the bottom of the carriage to the bracket at the bottom of the mast.

See Figure 4-12.

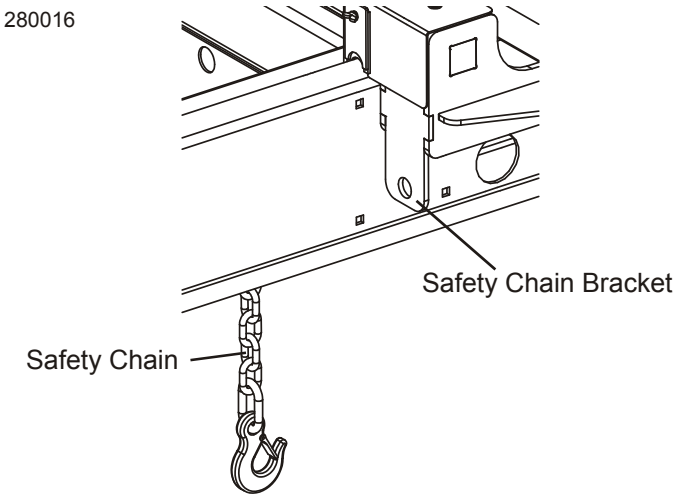

FIG. 4-12

10. Store the loading ramps on the bed rails. Secure to the bed with the two retaining brackets.

CAUTION! Check to be sure the saw head safety chain is secured before towing the sawmill. Failure to properly secure the saw head can result in severe machine damage. Be sure the blade housing and pulley covers are in place

and secure. Use the safety retainer pin and cable to fasten blade housing covers.

11. Remove all loose objects from the bed of the mill. Store the outrigger jack handle in the bracket provided on the rear/loading-side outrigger guide. Reel in the winch cable and remove the winch handle.

12. Place both fenders in the slots located behind the trailer tires and secure with rubber straps. Raise all but the very front outrigger.

For Fine Adjust Outriggers (FAOs), be sure to adjust the outrigger base height so that the grease fitting is just below the lowest outrigger hole before securing the FAO in position with the lock pin.

CAUTION! Be sure the outrigger base is adjusted properly before securing the FAO in position with the lock pin. Failure to do so will cause damage to the outrigger grease fitting.

CAUTION! Do not adjust the FAO outrigger base height while there is weight on the FAO. Damage to the FAO may result.

See the trailer operator's manual for specific information regarding hitch operation and towing the sawmill.

SECTION 5 MAINTENANCE

This section lists the maintenance procedures that need to be performed.

See the *Maintenance Log* located after this section for a complete list of maintenance procedures and intervals. Keep track of machine maintenance by filling in the machine hours and the date you perform each procedure.

0 **This symbol** identifies the interval (hours of operation) at which each maintenance procedure should be performed.

Be sure to refer to option and engine manuals for other maintenance procedures.

5.1 Wear Life

See Table 5-1. This chart lists estimated life expectancy of common replacement parts if proper maintenance and operation procedures are followed. Due to the many variables which exist during sawmill operation, actual part life may vary significantly. This information is provided so that you may plan ahead in ordering replacement parts.

Part Description	Estimated Life
B57 Blade Wheel Belts	400 hours
Blade Guide Rollers	1000 hours
Drive Belt	1250 hours

TABLE 5-1

5.2 Blade Guides

WARNING! Before performing service near moving parts such as blades, pulleys, motors, belts and chains, first turn the key switch to the OFF (#0) position and remove the key. If the key is turned on and moving parts activated, serious injury may result.

1. Check the rollers for performance and wear every blade change. Make sure the rollers are clean and spinning freely. If not, replace them. Replace any rollers which have worn smooth or have become cone shaped.

5.3 Sawdust Removal

WARNING! Before performing service near moving parts such as blades, pulleys, motors, belts and chains, first turn the key switch to the OFF (#0) position and remove the key. If the key is turned on and moving parts activated, serious injury may result.

AR Remove the excess sawdust from the blade wheel housings and sawdust chute every blade change.

WARNING! Always keep clear of exiting sawdust. Keep hands, feet and any other objects away from the sawdust chute when operating sawmill. Failure to do so may result in serious injury.

WARNING! Always check to ensure the steel fingers inside the sawdust chute are in place before operating the sawmill. The steel fingers have been designed to help prevent a broken blade or some other object from becoming a projectile and exiting the sawdust chute. Failure to have these fingers in place may result in serious injury.

Remove sawdust buildup from rope feed pulleys and up/down chain sprockets as necessary.

5.4 Carriage Track, Wiper & Scrapers

WARNING! Before performing service near moving parts such as blades, pulleys, motors, belts and chains, first turn the key switch to the OFF (#0) position and remove the key. If the key is turned on and moving parts activated, serious injury may result.

Properly maintaining the sawmill carriage track is critical in preventing corrosion that can cause pitting and scaling on the rail surfaces. Pitted and scaled surfaces can, in turn, cause rough cuts or jerky power feed movement.

See Figure 5-1.

8

1. Clean track rails to remove any sawdust and sap buildup every eight hours of operation.

Use a light-grade sandpaper or emery cloth to sand off any rust or other adhering particles from the rails.

CAUTION! Keep track rails free of rust. Formation of rust on the track rail in the areas where the cam bearings roll can cause rapid deterioration of the track rail's surface.

Lubricate the rails by wiping them with Dexron III ATF transmission fluid. Lubrication will help protect the rails from corrosive elements such as acid rain and/or moisture from nearby bodies of saltwater (if applicable). This lubrication is essential to maintain the integrity of the track rails and track rollers and to achieve long service life.

25

2. Remove sawdust from the track roller housings and lubricate the felt track wiper every twenty-five hours of operation.

Remove the track roller housing covers and brush any sawdust buildup from the housings.

Clean and lubricate the felt track wipers. Unbolt the middle track cover, remove from the sawmill and remove any sawdust buildup. Soak the felt wiper with Dexron III transmission fluid.

CAUTION! Reinstall the track wiper so that it lightly touches the track rail. If the wiper presses too firmly against the rail, it can cause the feed to bind.

AR

3. Check the track scrapers as needed. Make sure the scrapers fit firmly against the rail. If a track scraper needs to be adjusted, loosen the screw, push the scraper downward until it fits firmly against the rail, and retighten the screw.

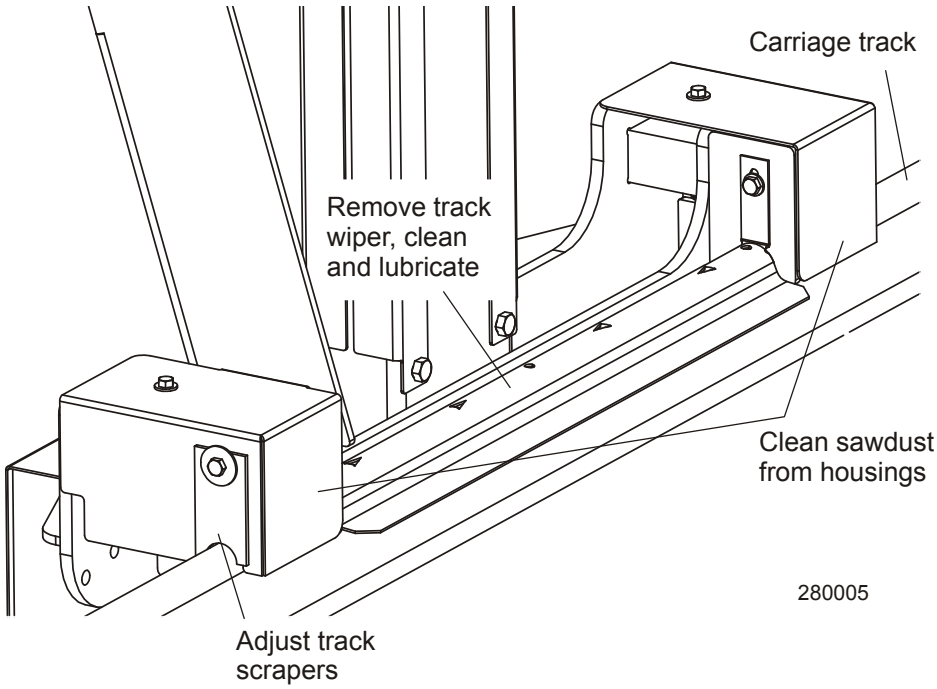

FIG. 5-1

5.5 Vertical Mast Rails

WARNING! Before performing service near moving parts such as blades, pulleys, motors, belts and chains, first turn the key switch to the OFF (#0) position and remove the key. If the key is turned on and moving parts activated, serious injury may result.

50 Clean and lubricate the vertical mast rails every 50 hours of operation. Clean with solvent and remove any rust with a light-grade sand paper or emery cloth. Lubricate the mast with motor oil or automatic transmission fluid (ATF).

CAUTION! Never use grease on the mast rails as it will collect sawdust.

5.6 Miscellaneous

WARNING! Before performing service near moving parts such as blades, pulleys, motors, belts and chains, first turn the key switch to the OFF (#0) position and remove the key. If the key is turned on and moving parts activated, serious injury may result.

50

1. Oil all chains with Dexron III ATF every fifty hours of operation.

CAUTION! Do not use chain lube. It causes sawdust buildup in chain links.

50

2. Grease the side support pivots with a NLGI No. 2 grade lithium grease every fifty hours of operation.

3. Check the mill alignment every setup (*See Section 7*).

AR

4. **Rev. A1.00 - A1.02 Only:** Lubricate the tensioner screw threads with a NLGI No. 2 grade lithium grease as needed.

5. Make sure all safety warning decals are readable. Remove sawdust and dirt. Replace any damaged or unreadable decals immediately. Order decals from your Customer Service Representative.

5.7 Blade Wheel Belts

WARNING! Before performing service near moving parts such as blades, pulleys, motors, belts and chains, first turn the key switch to the OFF (#0) position and remove the key. If the key is turned on and moving parts activated, serious injury may result.

50 Rotate the blade wheel belts and check them for wear. Rotating the belts every 50 hours will provide longer belt life. Replace belts as necessary. Use only B57 belts manufactured by Goodyear or Browning.

5.8 Drive Belt Adjustment

WARNING! Disconnect and lockout power before performing any service to the electrical system. For battery-powered equipment, disconnect the negative battery terminal cable. Failure to do so may result in injury and/or electrical system damage.

WARNING! Before performing service near moving parts such as blades, pulleys, motors, belts and chains, first turn the key switch to the OFF (#0) position and remove the key. If the key is turned on and moving parts activated, serious injury may result.

WARNING! Do not for any reason adjust the engine drive belts or belt support bracket with the engine running. Doing so may result in serious injury.

50 **See Table 5-2.** See the table below for drive belt tension specifications for your model sawmill. Wood-Mizer offers a belt tension gauge (Part No. 016309) that will let you accurately measure the belt tension.

Engine/Motor	After First	Then Every	Belt Tension
G18/G25/D18/D19	20 hrs	50 hrs	7/16” (11mm) deflection with 14 lbs. of deflection force

TABLE 5-2

To adjust the drive belt tension:

1. Loosen the drive belt jam and hex nuts. Turn the jam nut counterclockwise (as viewed from the top) to tighten the belt, clockwise to loosen the belt.

See Figure 5-2.

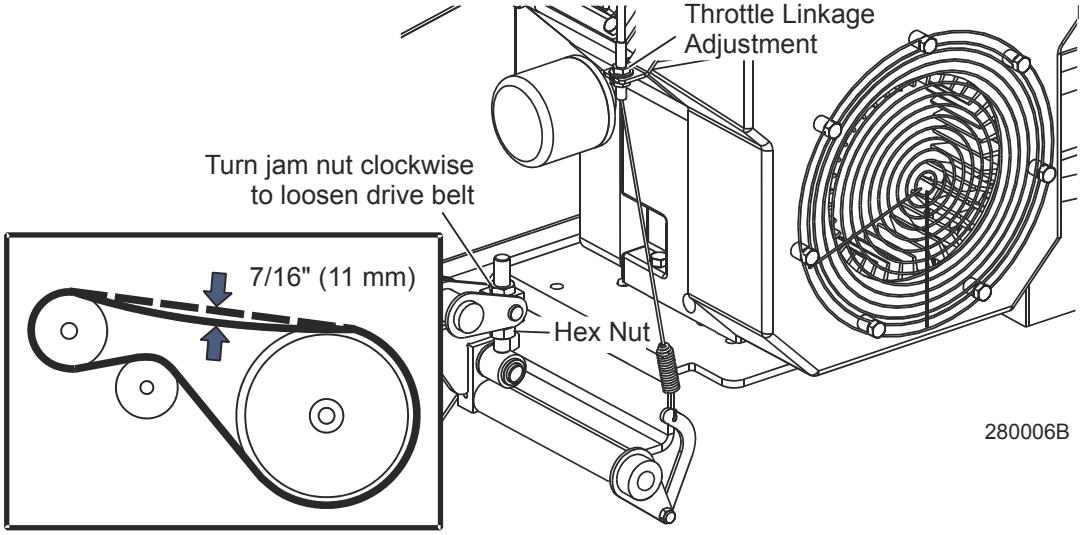

2. **GAS OPTION ONLY:** After tensioning the drive belt, check the throttle linkage and adjust if necessary. With the clutch handle engaged, the throttle linkage should move the throttle lever to full speed. To adjust, loosen the throttle linkage adjustment nuts and slide the throttle linkage down. Retighten the screw.

AR

Periodically check the drive belt for wear. Replace any damaged or worn belts as needed.

5.9 Up/Down System

WARNING! Before performing service near moving parts such as blades, pulleys, motors, belts and chains, first turn the key switch to the OFF (#0) position and remove the key. If the key is turned on and moving parts activated, serious injury may result.

AR

Adjust the up/down chain tension as needed. Measure chain tension with the head all the way to the top of the vertical mast. Secure the head with a chain at the top. Find the chain adjusting bolt at the bottom of the mast. Use the adjustment nuts to adjust the bolt until the center of the chain can be deflected 3/4” (1.9cm) forward *and* 3/4” (1.9cm) backward with a 5 lb. (2.3 Kg) deflection force.

WARNING! Always secure the saw head with a 5/16" chain with at least 1900 lbs. working load capacity before adjusting the up/down chain. The cutting head may fall, causing severe injury or death.

A chain tension adjustment nuts are provided on the sawhead assembly. Turn the upper and lower nuts clockwise to tighten the up/down chain. Turn the nuts counterclockwise to loosen the chain. Retighten the adjustment nuts after tensioning the chain.

See Figure 5-3.

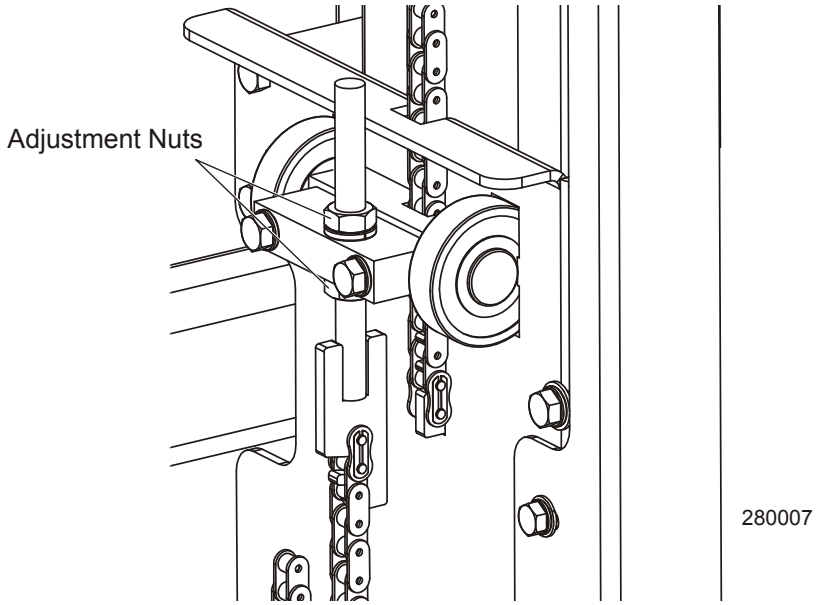

FIG. 5-3

AR The up/down system is equipped with a gas spring assist mechanism to provide improved speed and performance. The saw head must be secured and tension released from the assist assembly before performing any maintenance to assist components.

WARNING! Always secure the saw head with a 5/16" chain with at least 1900 lbs. working load capacity before servicing the up/down assist. The cutting head may fall, causing severe injury or death.

WARNING! Release pressure from the up/down assist prior to performing any service to the assembly. Failure to do so may result in the assembly flying apart, causing injury or damage to the equipment.

1. Raise the saw head all the way to the top of the mast and secure with a chain.

2. Locate the up/down assist tension assembly.

   See Figure 5-4.

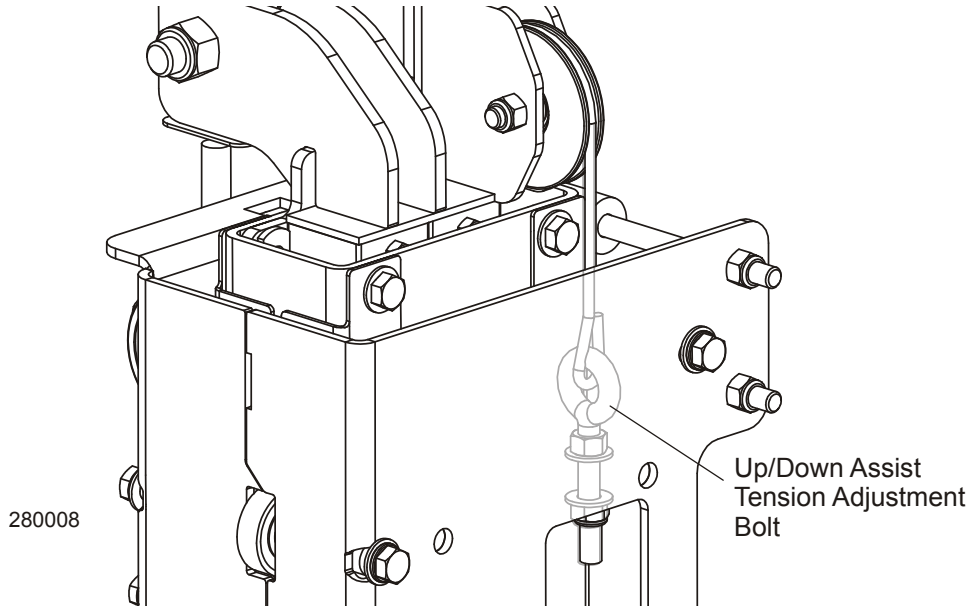

FIG. 5-4

3. Disassemble the up/down chain and remove the chain from the upper chain sprocket.

4. Remove the two upper mounting bolts at the top of the assist assembly and lift the assembly from the mast tube.

NOTE: The assist assembly weighs approximately 70 lbs. It

is recommended two people lift the assembly from the mast. A hoist or some other mechanical method may also be used.

5. Once the assist assembly is removed, components may easily be disassembled and serviced as needed. Do not disassemble the gas spring cylinders.

WARNING! The gas spring cylinders are pressurized. Disassembly of cylinder may result in injury or damage to the cylinder.

6. When service is complete, reinstall the assist assembly in the reverse order of the disassembly procedure. Tighten the tension bolt all the way.

200 **See Figure 5-5.** Lubricate the up/down crank handle bearings every 200 hours with a NLGI No. 2 grade lithium grease. Apply the grease to the fitting on the handle bracket tube.

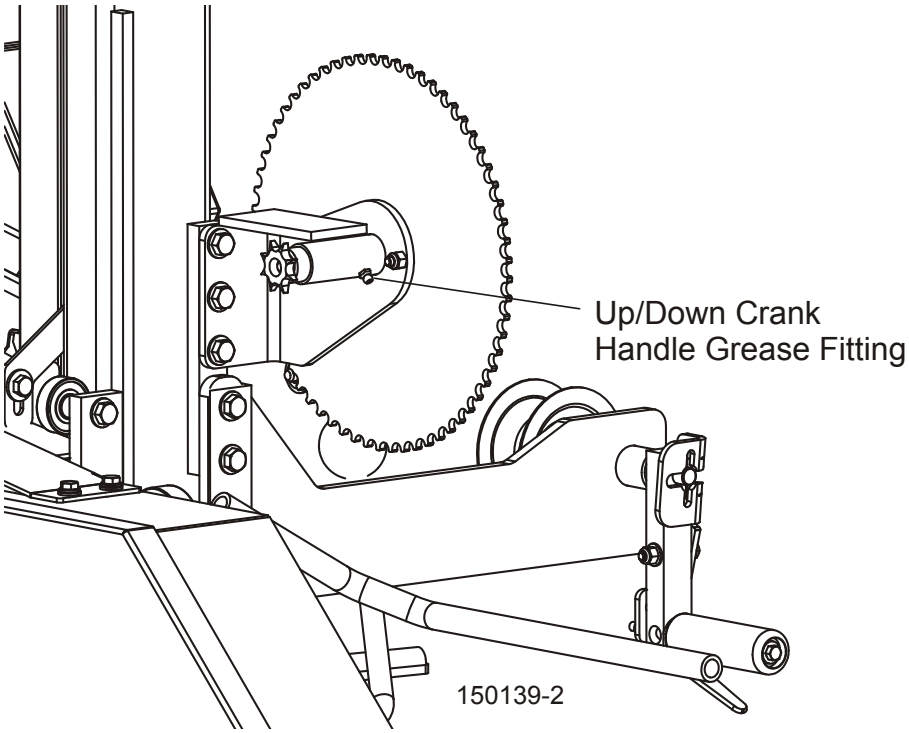

FIG. 5-5

5.10 Feed Rope

WARNING! Before performing service near moving parts such as blades, pulleys, motors, belts and chains, first turn the key switch to the OFF (#0) position and remove the key. If the key is turned on and moving parts activated, serious injury may result.

To install the feed rope, perform the following steps:

1. Slip one end of the rope into the front rope mount plate. Tie a knot in the end of the feed rope. Route the rope between the saw head carriage and bed frame tube.

See Figure 5-6.

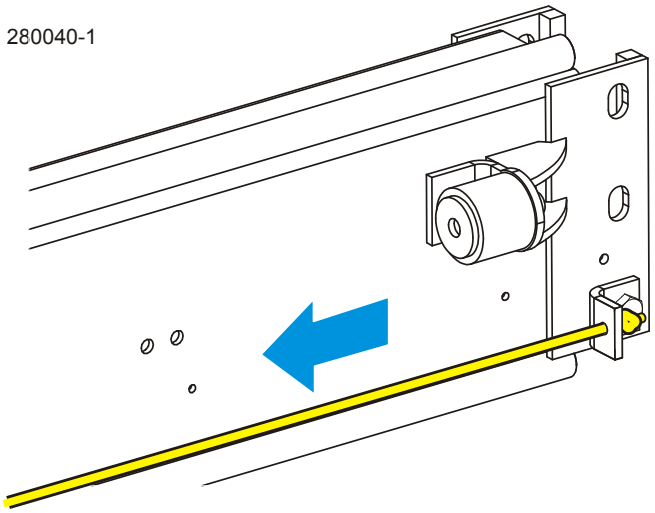

FIG. 5-6

2. Loop the rope clockwise around the lower double groove roller and route to the feed crank handle.

See Figure 5-7. Loop the feed rope around the lower roller groove closer to the bed frame tube.

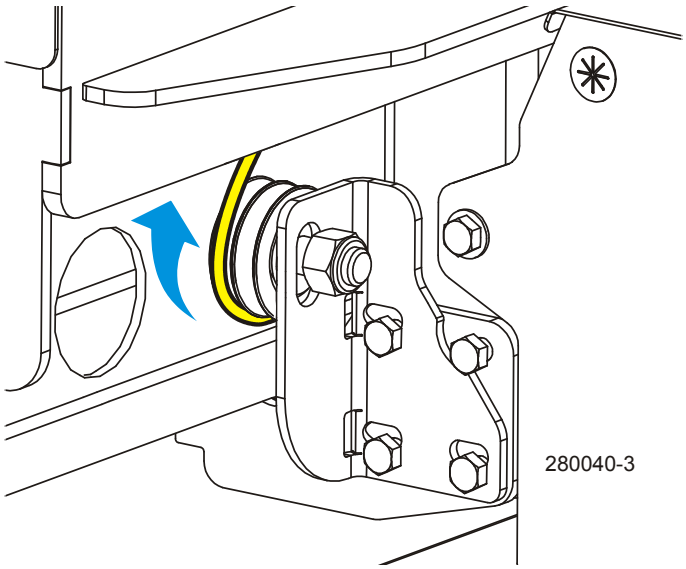

FIG. 5-7

3. Loop the rope counterclockwise around the feed crank pulley and route back down to the lower double groove roller.

   See Figure 5-8. Loop the feed rope around the feed crank pulley three times.

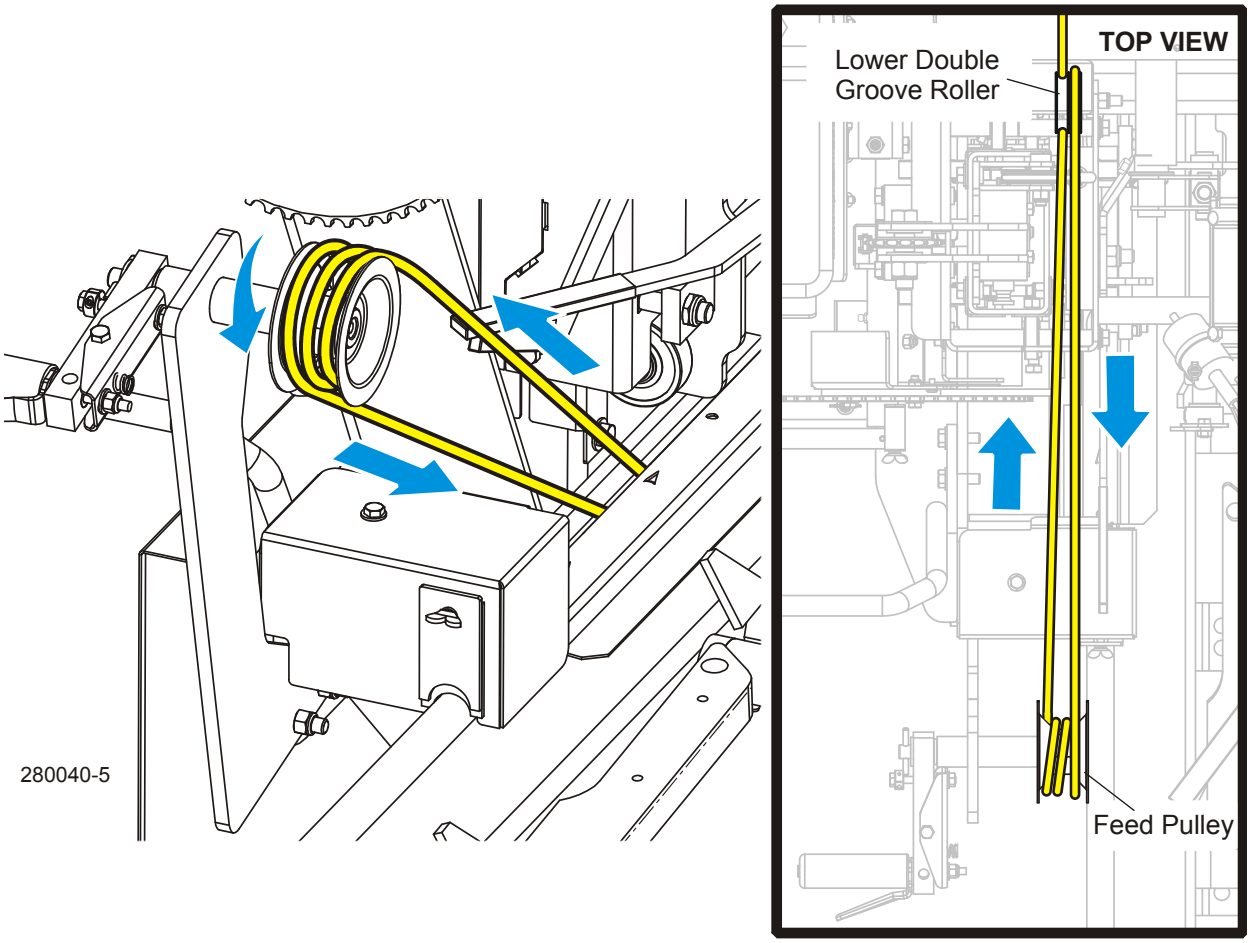

FIG. 5-8

4. Route the rope clockwise around the outer groove of the lower roller.

See Figure 5-9.

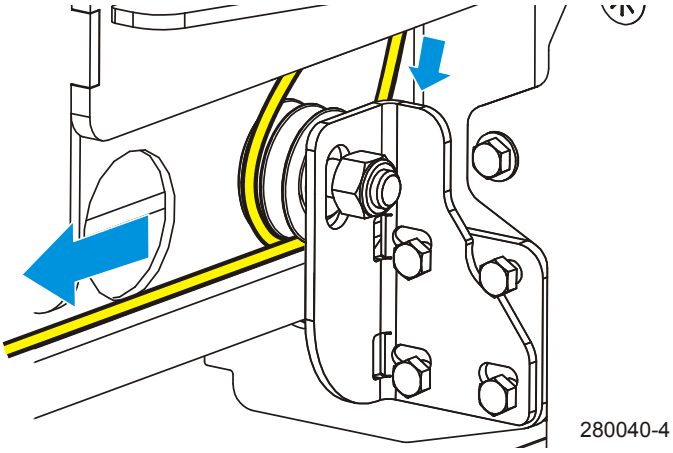

FIG. 5-9

5. Route the rope to the rear end of the mill. Slip the rope through one hole in the rope lock plate and the eye bolt. Route the rope back and slip through the other hole in the lock plate. Tie a knot near the end of the rope.

See Figure 5-10.

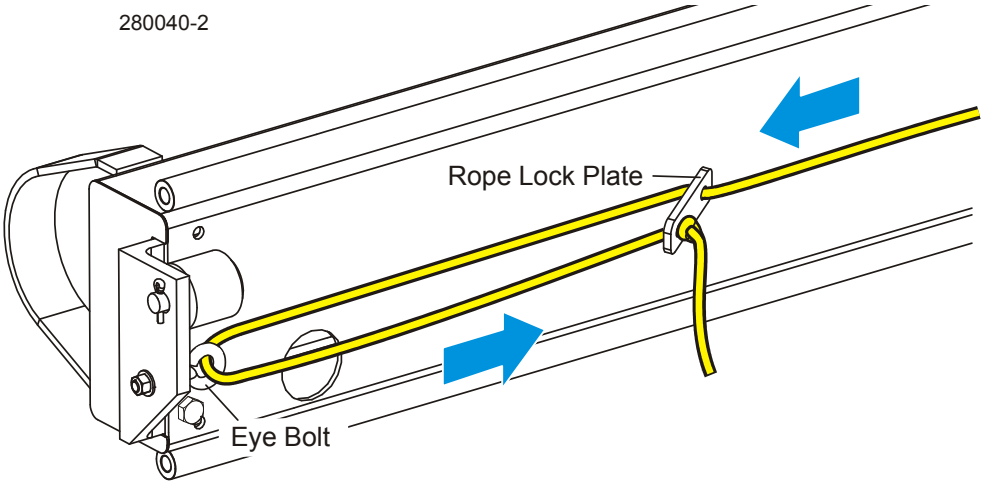

FIG. 5-10

Adjust the feed rope as needed. Measure the feed rope tension with the saw head all the way toward the front of the mill. The middle of the rope should have 6-8" deflection. To tighten, pull the rope lock plate closer to the front end of the mill.

5.11 Charging The Battery

DANGER! Batteries expel explosive gases. Keep sparks, flames, burning cigarettes, or other ignition sources away at all times. Always wear safety goggles and a face shield when working near batteries. Failure to do so will cause serious injury. [1]

WARNING! Battery posts, terminals and related accessories contain lead and lead compounds, chemicals known to the State of California to cause cancer and reproductive harm. Wash hands after handling.

WARNING! Charge the battery in a well ventilated area. Do not attempt to charge a frozen battery.

Use extreme care to avoid spilling or splashing electrolyte (which is dilute sulfuric acid) as it can destroy clothing and burn the skin. If electrolyte is spilled or splashed on clothing or the body, it should be neutralized immediately and then rinsed with clean water. A solution of baking soda, or household ammonia, and water may be used as a neutralizer.

Electrolyte splashed into the eyes is extremely dangerous. If this should happen, force the eye open and flood it with cool, clean water for approximately fifteen minutes. A doctor should be called immediately when the accident occurs and “on-the-spot” medical attention given if possible. If a doctor cannot come to the scene of the accident immediately, follow his instructions concerning actions to take. Do not add eye drops or other medication unless advised to do so by the doctor. Do not place a battery or acid within the reach of children. If acid (electrolyte) is taken internally drink large quantities of water or milk. Follow with milk of magnesia, beaten egg or vegetable oil. Call a physician immediately.

If electrolyte is spilled or splashed on any surface of the machine, it should be neutralized and rinsed with clean water.

CAUTION! Do not overcharge the battery. Overcharging may reduce the overall service life of the battery.

[1] Battery Council International, copyright 1987

CAUTION! Be sure the battery is fully charged before transporting the sawmill. If the battery is not fully charged, excessive vibration could reduce the overall service life of the battery.

1. Turn the key to the OFF (#0) position and remove the key.
2. Remove the battery box lid.
3. Clean the battery terminals if necessary.
4. Connect the positive charger/jumper cable directly to the positive battery terminal.
5. Connect the negative charger/jumper cable to a grounded metal surface.
6. Follow the instructions supplied with your specific battery charger.

IMPORTANT: Be careful not to overcharge the battery, especially when using a high-rate or “boost” charger (40 amps or higher). These are intended to quickly charge a good battery that is discharged. They are not intended for unattended or long-term charging.

7. After the battery is completely recharged, remove the negative charger/jumper cable from ground.
8. Remove the positive charger/jumper cable from the battery.
9. Replace the battery box lid.

MAINTENANCE LOG

(Check Engine And Option Manuals For Additional Maintenance Procedures)

Check Blade Guide Roller Wear	See Section 5.2	Daily - Every Blade Change	DAILY MAINTENANCE PROCEDURES
Remove Excess Sawdust From Blade Wheel Housings And Sawdust Chute	See Section 5.3	Daily - Every Blade Change	
Inspect Fingers Inside Sawdust Chute	See Section 5.3	Daily - Every Blade Change	
Clean Sawdust From Battery Box Lid & Track Cover	See Section 5.3	Daily - Every 8 Hours	
Clean And Lubricate Track	See Section 5.4	Daily - Every 8 Hours	
Remove Sawdust From Upper Track Roller Housings	See Section 5.4	Bi-Weekly - Every 25 Hours	
Clean And Lubricate Upper Track Wiper	See Section 5.4	Bi-Weekly - Every 25 Hours	

PROCEDURE	REFERENCE	TOTAL HOURS OF OPERATION FILL IN THE DATE AND THE MACHINE HOURS AS YOU PERFORM EACH PROCEDURE. A SHADED BOX INDICATES MAINTENANCE IS NOT NEEDED AT THIS TIME.									
		50 HRS	100 HRS	150 HRS	200 HRS	250 HRS	300 HRS	350 HRS	400 HRS	450 HRS	500 HRS
Clean & lube mast rails	See Section 5.5										
Grease pivot points and bearings/Oil chains	See Section 5.6										
Lubricate blade tensioner	See Section 5.6										
Rotate drive/idle blade wheel belts/Check for wear	See Section 5.7										
Check belt tensions	See Section 5.8										
Lubricate Up/Down Crank Handle Bearings	See Section 5.9										
Check up/down chain tension	See Section 5.9										

MAINTENANCE LOG

PROCEDURE	REFERENCE	TOTAL HOURS OF OPERATION FILL IN THE DATE AND THE MACHINE HOURS AS YOU PERFORM EACH PROCEDURE. A SHADED BOX INDICATES MAINTENANCE IS NOT NEEDED AT THIS TIME.									
		550 HRS	600 HRS	650 HRS	700 HRS	750 HRS	800 HRS	850 HRS	900 HRS	950 HRS	1000 HRS
Clean & lube mast rails	*See Section 5.5*										
Grease pivot points and bearings/Oil chains	*See Section 5.6*										
Lubricate blade tensioner	*See Section 5.6*										
Rotate drive/idle blade wheel belts/Check for wear	*See Section 5.7*										
Check belt tensions	*See Section 5.8*										
Lubricate Up/Down Crank Handle Bearings	*See Section 5.9*										
Check up/down chain tension	*See Section 5.9*										

MAINTENANCE LOG

PROCEDURE	REFERENCE	TOTAL HOURS OF OPERATION FILL IN THE DATE AND THE MACHINE HOURS AS YOU PERFORM EACH PROCEDURE. A SHADED BOX INDICATES MAINTENANCE IS NOT NEEDED AT THIS TIME.									
		1050 HRS	1100 HRS	1150 HRS	1200 HRS	1250 HRS	1300 HRS	1350 HRS	1400 HRS	1450 HRS	1500 HRS
Clean & lube mast rails	*See Section 5.5*										
Grease pivot points and bearings/Oil chains	*See Section 5.6*										
Lubricate blade tensioner	*See Section 5.6*										
Rotate drive/idle blade wheel belts/Check for wear	*See Section 5.7*										
Check belt tensions	*See Section 5.8*										
Lubricate Up/Down Crank Handle Bearings	*See Section 5.9*										
Check up/down chain tension	*See Section 5.9*										

MAINTENANCE LOG

PROCEDURE	REFERENCE	TOTAL HOURS OF OPERATION FILL IN THE DATE AND THE MACHINE HOURS AS YOU PERFORM EACH PROCEDURE. A SHADED BOX INDICATES MAINTENANCE IS NOT NEEDED AT THIS TIME.									
		1550 HRS	1600 HRS	1650 HRS	1700 HRS	1750 HRS	1800 HRS	1850 HRS	1900 HRS	1950 HRS	2000 HRS
Clean & lube mast rails	*See Section 5.5*										
Grease pivot points and bearings/Oil chains	*See Section 5.6*										
Lubricate blade tensioner	*See Section 5.6*										
Rotate drive/idle blade wheel belts/Check for wear	*See Section 5.7*										
Check belt tensions	*See Section 5.8*										
Lubricate Up/Down Crank Handle Bearings	*See Section 5.9*										
Check up/down chain tension	*See Section 5.9*										

MAINTENANCE LOG

PROCEDURE	REFERENCE	TOTAL HOURS OF OPERATION FILL IN THE DATE AND THE MACHINE HOURS AS YOU PERFORM EACH PROCEDURE. A SHADED BOX INDICATES MAINTENANCE IS NOT NEEDED AT THIS TIME.									
		2050 HRS	2100 HRS	2150 HRS	2200 HRS	2250 HRS	2300 HRS	2350 HRS	2400 HRS	2450 HRS	2500 HRS
Clean & lube mast rails	*See Section 5.5*										
Grease pivot points and bearings/Oil chains	*See Section 5.6*										
Lubricate blade tensioner	*See Section 5.6*										
Rotate drive/idle blade wheel belts/Check for wear	*See Section 5.7*										
Check belt tensions	*See Section 5.8*										
Lubricate Up/Down Crank Handle Bearings	*See Section 5.9*										
Check up/down chain tension	*See Section 5.9*										

MAINTENANCE LOG

PROCEDURE	REFERENCE	TOTAL HOURS OF OPERATION FILL IN THE DATE AND THE MACHINE HOURS AS YOU PERFORM EACH PROCEDURE. A SHADED BOX INDICATES MAINTENANCE IS NOT NEEDED AT THIS TIME.									
		2550 HRS	2600 HRS	2650 HRS	2700 HRS	2750 HRS	2800 HRS	2850 HRS	2900 HRS	2950 HRS	3000 HRS
Clean & lube mast rails	*See Section 5.5*										
Grease pivot points and bearings/Oil chains	*See Section 5.6*										
Lubricate blade tensioner	*See Section 5.6*										
Rotate drive/idle blade wheel belts/Check for wear	*See Section 5.7*										
Check belt tensions	*See Section 5.8*										
Lubricate Up/Down Crank Handle Bearings	*See Section 5.9*										
Check up/down chain tension	*See Section 5.9*										

SECTION 6 TROUBLESHOOTING GUIDE

6.1 Sawing Problems

WARNING! Before performing service near moving parts such as blades, pulleys, motors, belts and chains, first turn the key switch to the OFF (#0) position and remove the key. If the key is turned on and moving parts activated, serious injury may result.

PROBLEM	CAUSE	SOLUTION
Blades Dull Quickly	Dirty logs	Clean or debark logs, especially on entry side of the cut
	When grinding teeth, heating too much and causing teeth to soften	Grind just enough metal to restore sharpness to the teeth. Use water/coolant while sharpening blade
	Poor sharpening techniques	Make sure the tip is being sharpened completely (See Sharpener Manual)
Blades Break Prematurely	Poor sharpening techniques	See Sharpener Manual
	Rubber belts on blade wheels worn to a point that blade contacts metal pulley - look for shiny spots on edge of wheels	Change blade wheel belts (B-57)
	Tension too tight	Tension blade to recommended specifications
Blade Does Not Track Right on Drive Wheel	Cant adjustment is incorrect	Readjust
	Flat/worn belts	Replace B-57 belts
Blade Guides Do Not Spin While Cutting	Frozen bearings	Replace bearings
Drive Belts Wear Prematurely or Jump	Engine/motor and drive pulleys out of alignment	Align pulleys.

PROBLEM	CAUSE	SOLUTION
Boards Thick Or Thin On Ends Or Middle Of Board.	Stress in log which causes log to not lay flat on the bed.	After log has been squared, take equal cuts off opposing sides. Take a board off the top. Turn the log 180 degrees. Take a board off. Repeat, keeping the heart in the middle of the cant, and making it your last cut.
	Set in teeth.	Resharpen and reset blade.
	Bed rails misaligned.	Realign sawmill.
Height Adjustment Jumps or Stutters When Moving Up or Down.	Up/down chain improperly adjusted.	Adjust up/down chain.
Lumber Is Not Square	Vertical side supports not square to bed	Adjust side supports.
	Blade not parallel to bed rails	Adjust bed rails parallel to blade.
	Sawdust or bark between cant and bed rails	Remove particles
	Tooth set problems	Resharpen and reset blade
Sawdust Builds Up On Track	Excessive oiling	Do not oil track
	Track wipers worn	Adjust wipers to firmly contact track
	Track is sticky	Clean track with solvent and apply silicone spray
Wavy Cuts	Excessive feed	Slow feed rate
	Improperly sharpened blade (This will be the problem 99% of the time!)	Resharpen blade (See Sharpener Manual - read entire manual!)
	Blade guides improperly adjusted	Adjust blade guides.
	Sap buildup on blade	Use Water Lube.
	Tooth set problem	Resharpen and reset blade

6.2 Power Feed Problems

LT28 Rev. A1.00 - A6.01

Follow the instructions below to solve the possible power feed problems.

See Figure 6-1.

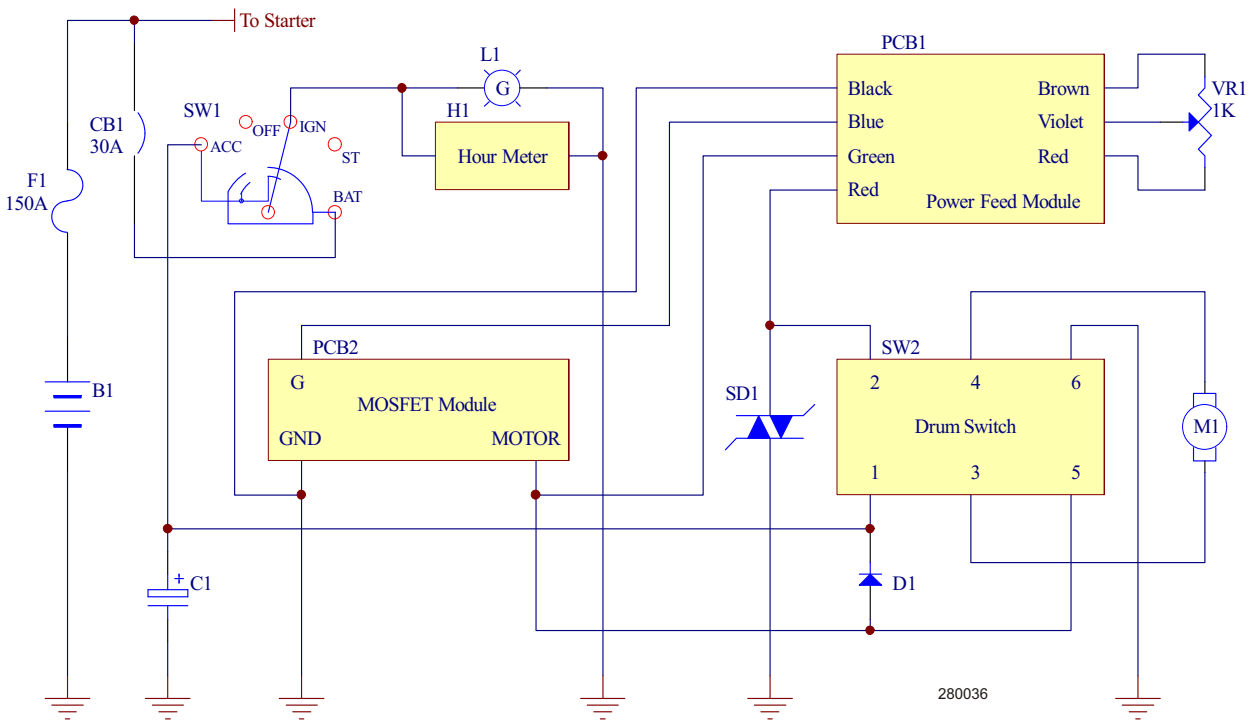

FIG. 6-1

Testing Components:

1. Free Wheeling Diode Test:

   - Remove the blue wire from the motor terminal of the Mosfet.
   - With a digital volt meter set to ohms, take a reading at the ring terminal of the blue wire to the aluminum mounting block for the diode.
   - Reverse the leads of the meter and take another reading.
   - You should have continuity only one direction.
   - Any readings other than this will require replacement of the diode.

2. Mosfet Test - disconnect all wires:

- Set meter to Ohms.

Connect the red lead to “S” or “GND” terminal. Connect the black lead to “G” or unmarked small terminal. The meter should read no less than approximately 1k Ohms.

Connect the red lead to “G” or unmarked small terminal. Connect the black lead to “D” or “Motor” terminal. The meter should read around 335k Ohms.

- Set meter do Diode.

Connect the red lead to “D” or “Motor terminal. Connect the black lead to “S” or “GND” terminal. The meter should read open (“OL”)

3. Control Module Test:

- If the above tests are good watch the light on the module during forward operation.
- If going forward, the power light should be on.
- As you turn the speed control switch from slow to fast the In and Out lights should get brighter.
- The OV and OL lights should not be on.
- Any readings other that this would require the replacement of the control module.

4. Variable Feed Rate Switch Test:

- Purple or White with purple stripe wire voltage should read approximately 3.5VDC.
- Brown or White with brown stripe wire voltage should read approximately 1.0VDC.
- Red or White with red stripe wire voltage should read a variable voltage of 1.0VDC to 3.5VDC while feed rate switch is move from slow to fast position.

SECTION 7 SAWMILL ALIGNMENT

The Wood-Mizer sawmill is factory aligned. Two alignment procedures are available to realign the sawmill if necessary. The Routine Alignment instructions should be performed as necessary to solve sawing problems not related to blade performance. The Complete Alignment procedure should be performed approximately every 1500 hours of operation (sooner if you regularly transport the sawmill over rough terrain).

7.1 Routine Alignment Procedure

Blade Installation

1. Remove the blade and check the blade wheel belts. Remove any sawdust buildup from the surface of the belts. Replace worn belts if they do not keep the blade from contacting the blade wheel.

2. Install a clean blade and apply the appropriate tension (*See Section 3.4*).

3. Adjust the idle-side cant control to track the blade (*See Section 3.5*).

4. Close the blade housing cover and make sure all persons are clear of the saw head.

5. Start the engine.

6. Engage the blade, rotating the blade until the blade positions itself on the wheels.

WARNING! Do not spin the blade wheels by hand. Spinning the blade wheels by hand may result in serious injury.

7. Disengage the blade. Turn the engine off.

Saw Head Tilt

As the blade enters a wide log or cant, the outside of the saw head will drop down slightly. To compensate for the drop, the saw head is adjusted 1/16" (1.5 mm) higher at the outside.

1. Move the saw carriage so the blade is positioned over a bed rail. Adjust the blade guide arm to 1/2" (15 mm) from full open.

2. Raise the saw head so the bottom of the blade measures 14 3/4" (375 mm) from the top surface of the bed rail near the inner blade guide assembly.

   See Figure 7-1.

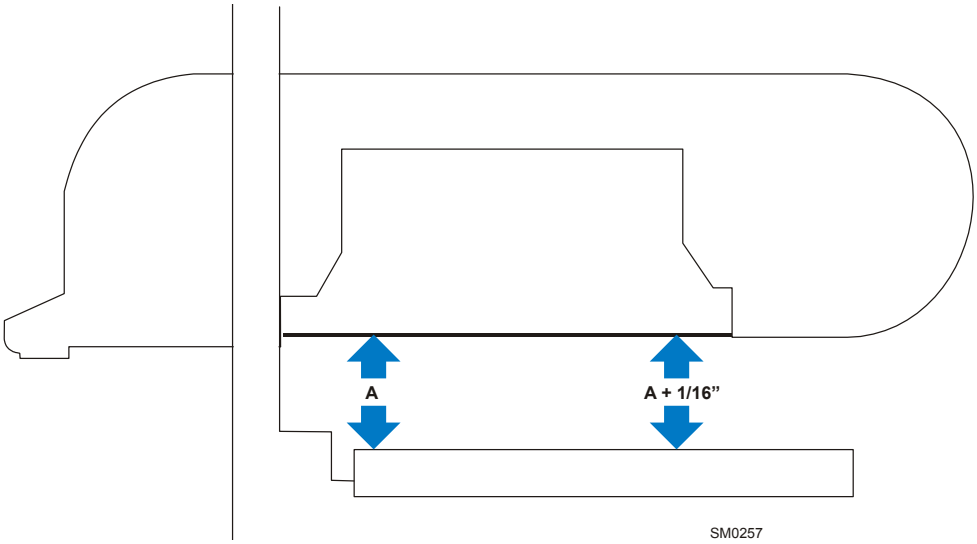

FIG. 7-1

3. Measure from the blade to the bed rail near the outer blade guide assembly. This measurement should be 1/16" (1.5 mm) higher than the inner measurement or 14 13/16" (376.5 mm).

See Figure 7-2. To adjust the saw head tilt, use the horizontal adjustment nuts. To raise the outside of the saw head, tighten the two adjustment nuts. Recheck the measurement from the blade to the bed rails and adjust the horizontal adjustment nuts until the outside of the saw head is 1/16" higher than the inside.

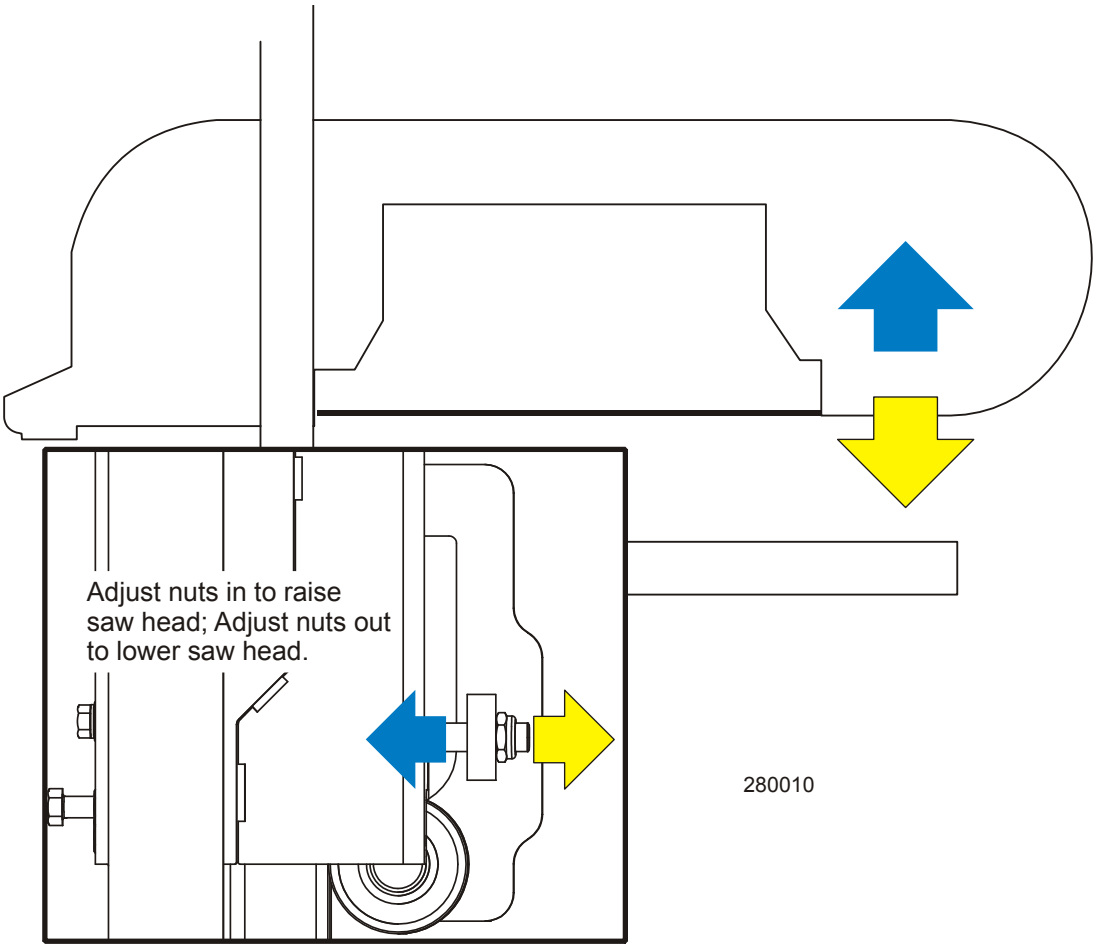

DETAIL OF LOWER ROLLER ASSEMBLY

FIG. 7-2

Blade Guide Arm Alignment

The blade guide arm moves the outer blade guide in and out. If the arm becomes loose, the blade guide will not deflect the blade properly, causing inaccurate cuts. A loose blade guide arm can also cause blade vibration.

1. Adjust the blade guide arm out to 1/2" (15 mm) from fully open.

   See Figure 7-3. Use the inside top and bottom screws to adjust the arm up until the slide pad touches the saw head brace tube. Tighten the jam nuts.

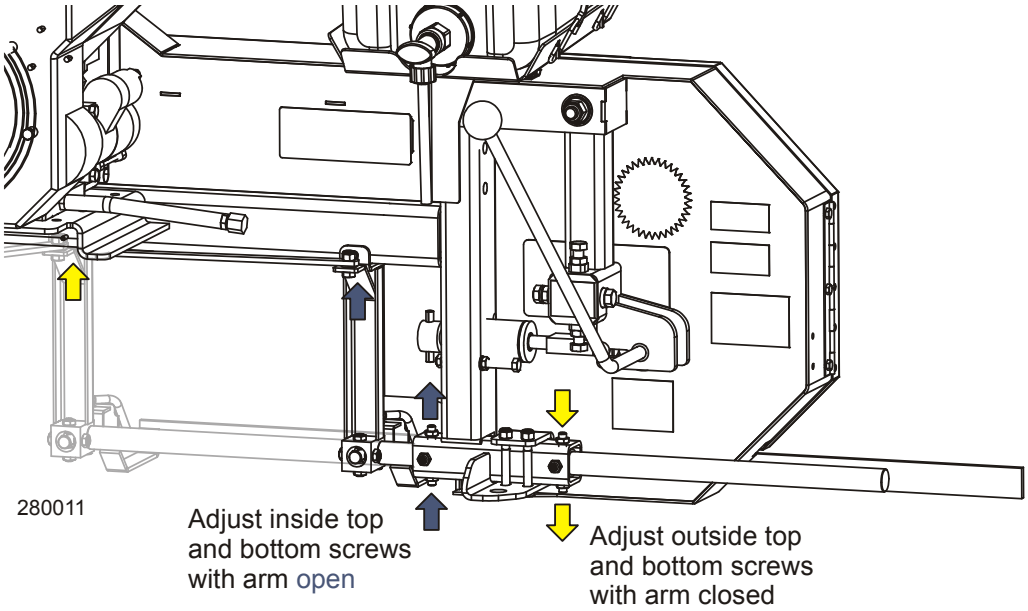

FIG. 7-3

2. Adjust the blade guide arm in all the way toward the other blade guide.

3. Use the outside top and bottom screws to adjust the arm up until the slide pad touches the saw head brace tube. Tighten the jam nuts.

   NOTE: When adjusting the blade guide arm screws, be careful not to tighten the screws too much or put the arm in a bind. Operate the blade guide arm to ensure the arm moves easily in and out.

See Figure 7-4. With the blade guide arm still all the way in toward the other blade guide, tighten all the side screws until they touch the arm. Back the screws off 1/4 turn and tighten the jam nuts.

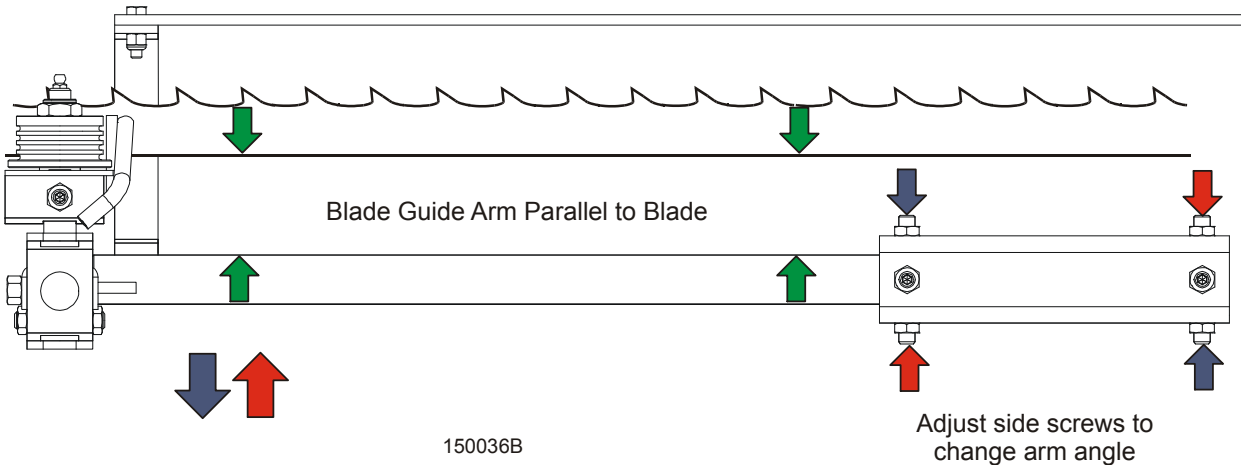

FIG. 7-4

4. Measure the distance between the blade guide arm and back edge of the blade. Adjust the appropriate side screws on the blade guide arm housing so the arm is measures the same distance from the blade at both ends of the arm.

5. To move the blade guide end of the arm toward the front of the sawmill, loosen jam nuts on the front inside screw and the rear outside screw. Turn the screws counterclockwise one full turn and tighten the jam nuts. Loosen the jam nuts on the front outside screw and the rear inside screw. Turn the screws clockwise until they touch the arm, back off 1/4” turn, and tighten the jam nuts.

6. To move the blade guide end of the arm toward the rear of the sawmill, loosen jam nuts on the front outside screw and the rear inside screw. Turn the screws counterclockwise one full turn and tighten the jam nuts. Loosen the jam nuts on the front inside screw and the rear outside screw. Turn the screws clockwise until they touch the arm, back off 1/4” turn, and tighten the jam nuts.

Blade Guide Vertical Tilt Alignment

The blade guides should be adjusted properly in the vertical plane. If the blade guides are tilted vertically, the blade will try to travel in the tilted direction.

A Blade Guide Alignment Tool (BGAT) is provided to help you measure the vertical tilt of the blade.

1. Open the adjustable blade guide arm 1/2" (15 mm) from full open.

2. Clip the alignment tool on the blade. Position the tool close to the outer blade guide assembly. Be sure the tool does not rest on a tooth or burr, and is lying flat against the bottom of the blade.

   See Figure 7-5.

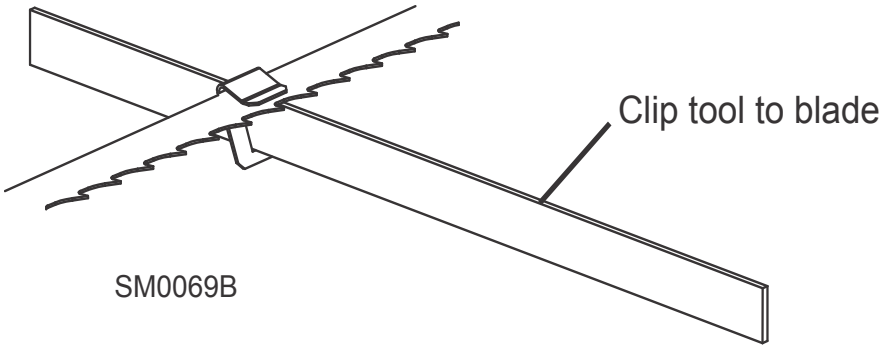

FIG. 7-5

3. Move the carriage so that the front end of the tool is positioned above the bed rail. Measure the distance from the bed rail to the bottom edge of the tool.

4. Move the carriage so that the back end of the tool is positioned above the bed rail. Measure the distance from the bed rail to the bottom edge of the tool.

5. If the measurement from the tool to the bed rail is not equal within 1/32" (.75 mm), adjust the vertical tilt of the outer blade guide roller.

6. Loosen one set screw at the side of the blade guide assembly.

See Figure 7-6. Loosen the jam nuts on the top and bottom vertical tilt adjustment screws. To tilt the roller up, loosen the bottom screw and tighten top screw. To tilt the roller down, loosen the top screw and tighten the bottom screw. Tighten the jam nuts and recheck the tilt of the blade.

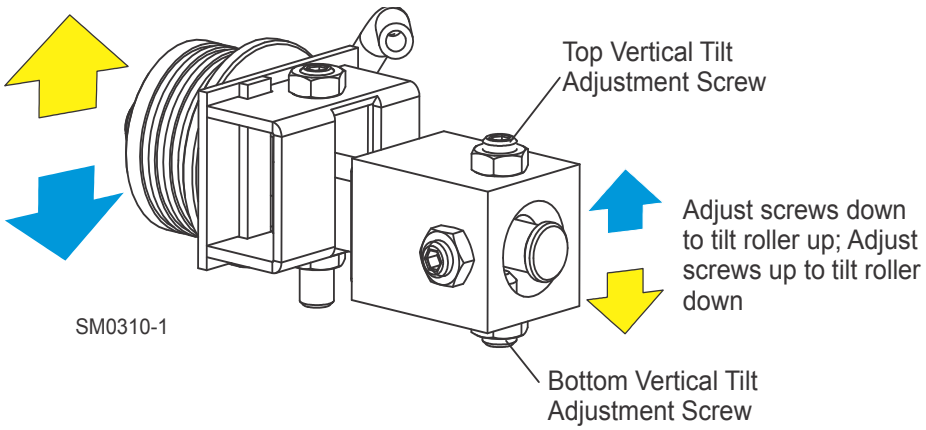

FIG. 7-6

7. Move the blade guide alignment tool close to the inner blade guide roller assembly and repeat the above steps. Adjust the vertical tilt of the inner blade guide if necessary.

Blade Guide Horizontal Tilt Adjustment

If the blade guides are tilted in the wrong direction horizontally, the back of the blade may contact the flange as the roller is spinning down, causing it to push the blade away from the guide roller.

8. Remove the blade guide alignment tool from the blade and adjust the blade guide arm halfway in.

9. Remove the clip from the blade guide alignment tool. Place the tool against the face of the outer blade guide roller.

See Figure 7-7.

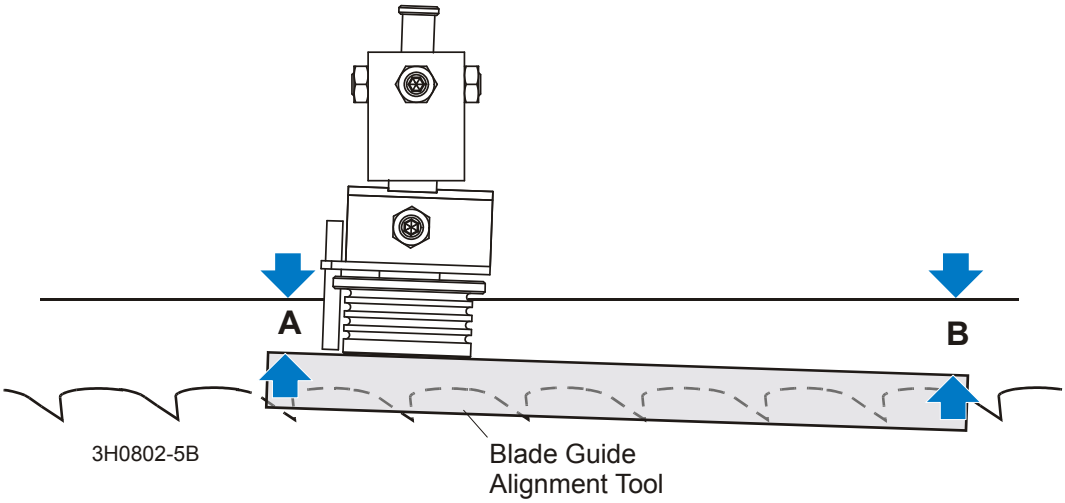

FIG. 7-7

10. Measure between the back edge of the blade and the tool at the end closest to the inner blade guide ("B").

11. Measure between the back edge of the blade and the other end of the tool ("A").

The roller should be tilted slightly to the left (’A’ 1/8" [3 mm] less than ’B’ ±1/8" [3 mm]).

See Figure 7-8. Loosen the jam nuts on the horizontal tilt adjustment screws. To tilt the roller left, loosen the right screw and tighten left screw. To tilt the roller right, loosen the left screw and tighten the right screw. Tighten the jam nuts and recheck the tilt of the blade.

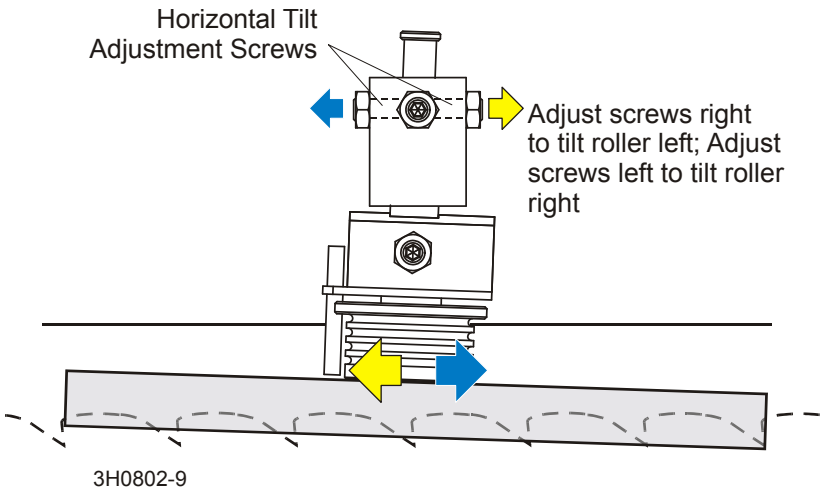

FIG. 7-8

12. Repeat the above steps for the inner blade guide roller assembly.

NOTE: Once the blade guides have been adjusted, any cutting variances are most likely caused by the blade. *See Blade Handbook, Form #600.*

Blade Guide Flange Spacing

Each blade guide must be adjusted so the roller flange is the correct distance from the back edge of the blade. If the flange is too close to or too far from the blade, the sawmill will not cut accurately.

> **HINT:** When adjusting blade guide spacing, loosen the top set screw and one side set screw only. This will ensure horizontal and vertical tilt adjustments are maintained when the adjustment screws are retightened.

1. Measure the distance between the flange on the outer blade guide roller to the back edge of the blade. This distance should measure 1/8" (3.0 mm). Adjust the roller back or forward if necessary.

   See Figure 7-9. Loosen the top and one side screw shown. Tap the blade guide forward or backward until properly positioned. Retighten the screws and jam nuts.

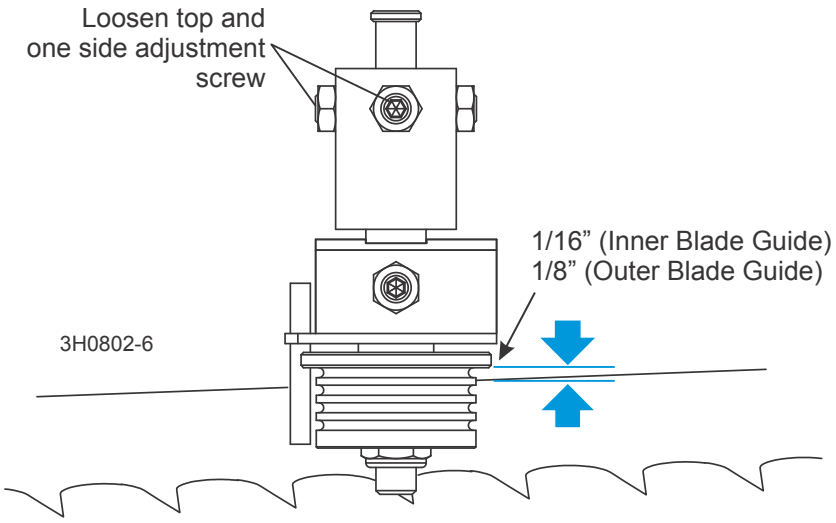

FIG. 7-9

2. Measure the distance between the flange on the inner blade guide roller to the back edge of the blade. This distance should measure 1/16" (1.5 mm). Adjust the roller back or forward if necessary.

Side Support Alignment

Logs and boards are clamped against the side supports when sawing. The sides supports must be square to the bed to ensure square lumber.

1. Swing a side support down and measure between the face of the support and the main bed tube. The distance at the top of the side support ('B') should be equal to or no more than 1/32" (0.8 mm) greater than the distance at the base of the side support ('A'). Adjust the horizontal tilt of the side support if necessary.

   See Figure 7-10. Loosen the two adjustment plate mounting bolts. Use a mallet to move the plate until the side support is parallel to the bed tube in the horizontal position. Retighten the mounting bolts.

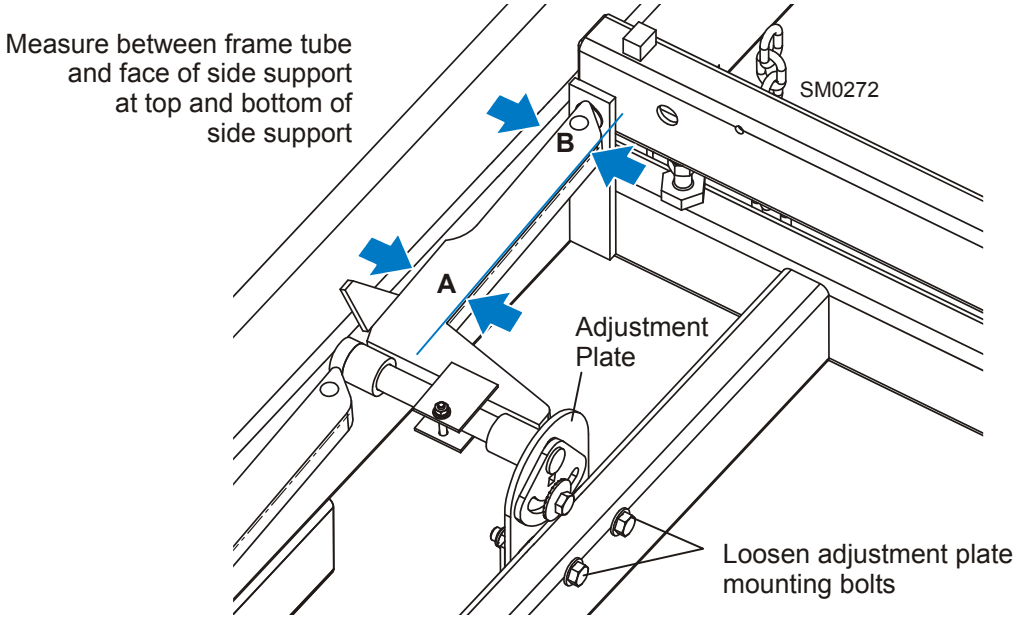

FIG. 7-10

2. Repeat the horizontal check for the remaining side supports. Adjust as necessary.

3. Place square alignment tubes (Part No. S12831 - 2 required) across the bed rails. Swing a side support up so that it is vertical.

4. Pull back at the top of the support to eliminate slack as if a log were being clamped against it.

5. Place a square against the face of the side support. The side support should be square or slightly tilted forward 1/32" (0.8 mm). Adjust the vertical tilt of the side support if necessary.

See Figure 7-11. Loosen the side support mounting bolt. Use a 3/8" ratchet to rotate the pin until the side support is square to the bed.

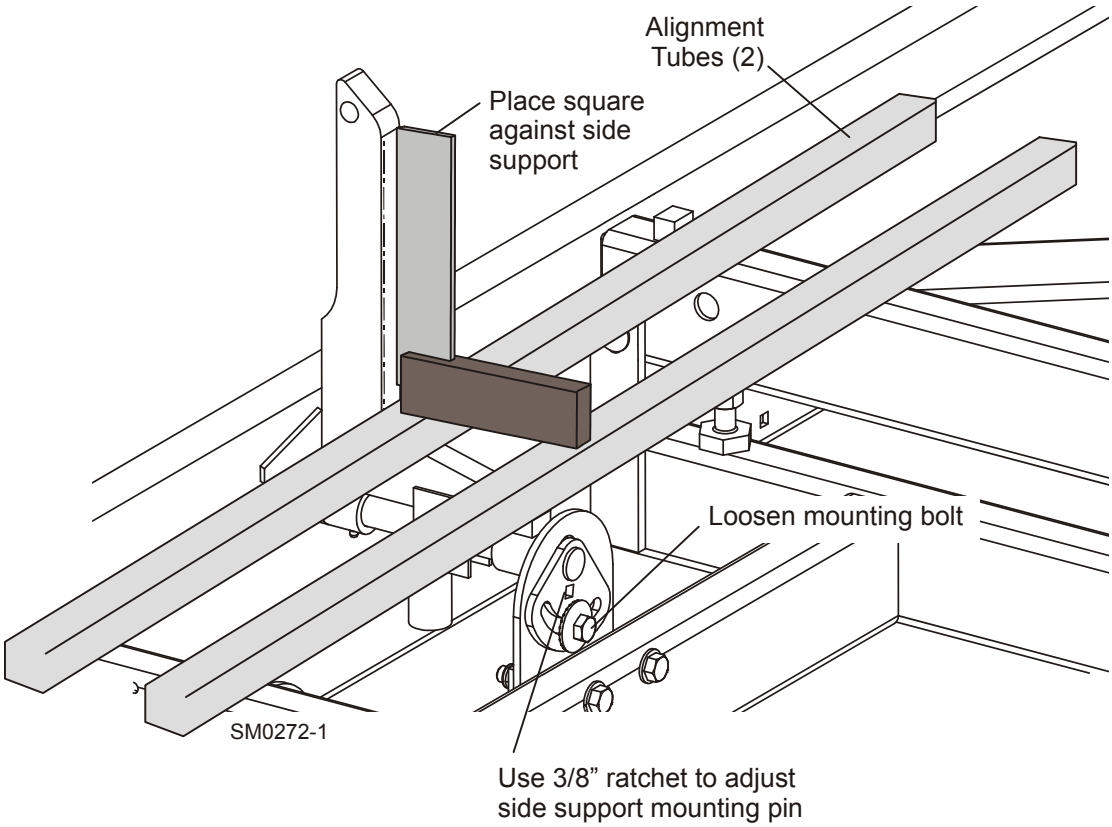

FIG. 7-11

6. Repeat the vertical check for the remaining side supports and adjust as necessary.

Blade Height Scale Adjustment

After the entire sawmill has been aligned and all adjustments made, check that the blade height scale indicates the true distance from the blade to the bed rails.

1. Move the saw carriage so the blade is positioned directly above one of the bed rails. Measure from the bottom edge on a down-set tooth of the blade to the top of the bed rail, near the inner blade guide assembly.

2. View the blade height scale with eyes level with the indicator. The scale should indicate the actual distance from the blade to the bed rail. Adjust the indicator if necessary.

   See Figure 7-12. Loosen the indicator bracket mounting bolts. Adjust the bracket up or down until the indicator is aligned with the correct mark on the scale (+0 -1/32 [0.8 mm]). Retighten the bracket mounting bolts.

   For example, if the measurement from the down-set tooth of the blade to the bed rail was 14 3/4" (375 mm), make sure the indicator reads 14 3/4" (375 mm) on the scale.

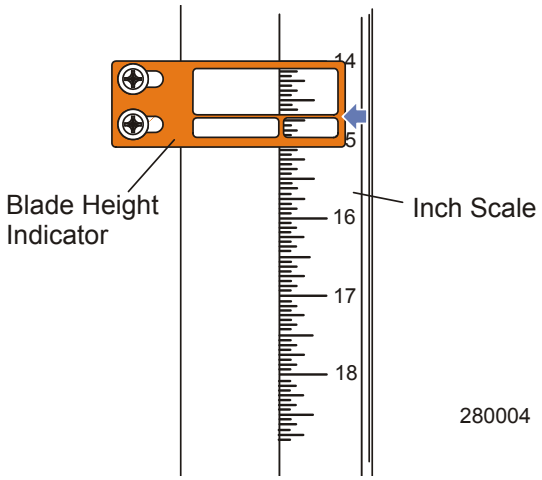

FIG. 7-12

7.2 Complete Alignment Procedure

Frame Setup

Before performing the following alignment procedures, setup the mill on firm, level ground.

If your sawmill is stationary, with no trailer axle, shim the feet so the weight of the sawmill is evenly supported.

If your sawmill has a trailer axle and adjustable outriggers, adjust the outriggers as follows:

LT28: Adjust the two outriggers on the main frame tube down just enough to lift weight from the trailer tire.

All Portable Sawmills: Adjust the two outer outriggers down just so they touch the ground but do not bear weight.

See SECTION 3 for additional setup information.

Blade Installation

1. Remove the blade and replace the blade wheel belts. New blade wheel belts are required to perform the complete alignment procedure.

2. Blow sawdust off of the blade guide assemblies. Remove sawdust from the blade housings.

3. Remove the blade guide assemblies.

   NOTE: To remove the blade guide assemblies and maintain the tilt adjustments, only loosen one side screw and the top screw. Leaving the other side screw and bottom screw in position will insure you will return the rollers to their original tilt adjustment.

4. Adjust the outer blade guide arm in or out until the outer blade guide is approximately 24” from the inner blade guide.

5. Install a new blade and apply the appropriate tension (*See Section 3.4*).

6. Close the blade housing cover and make sure all persons are clear of the saw head.

7. Start the engine.

8. Engage the blade, rotating the blade until the blade positions itself on the wheels.

   WARNING! Do not spin the blade wheels by hand. Spinning the blade wheels by hand may result in serious injury.

9. Disengage the blade. Turn the engine off.

Blade Wheel Alignment

The blade wheels should be adjusted so they are level in the vertical and horizontal planes. If the blade wheels are tilted up or down, the blade will want to travel in the tilted direction. If the blade wheels are tilted horizontally, the blade will not track properly on the wheels.

1. Use the blade guide alignment tool to check the vertical alignment of each blade wheel. Attach the tool to the blade near the inner blade guide mount. Be sure the tool does not rest on a tooth or burr, and is lying flat against the bottom of the blade.

   See Figure 7-13.

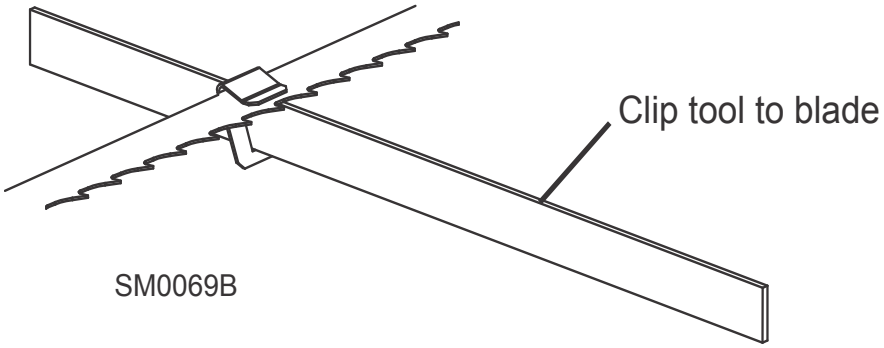

FIG. 7-13

2. Move the saw carriage so the front end of the tool is positioned over the first bed rail. Measure from the bottom of the tool to the top surface of the bed rail.

3. Move the saw carriage so the rear of the tool is positioned over the bed rail. Again, measure from the bottom of the tool to the bed rail.

4. If the two measurements differ by more than 1/16" (1.5 mm), adjust the vertical tilt of the drive-side blade wheel.

   See Figure 7-14. Use the vertical adjustment screws to adjust the drive-side blade wheel. To tilt the wheel down, loosen the top adjustment screw one quarter turn. Loosen the jam nut on the bottom adjustment screw and tighten the screw. Tighten the top and bottom jam nuts.

   To tilt the wheel up, loosen the bottom adjustment screw one quarter turn. Loosen the jam nut on the top adjustment screw and tighten the screw. Tighten the top and bottom jam nuts.

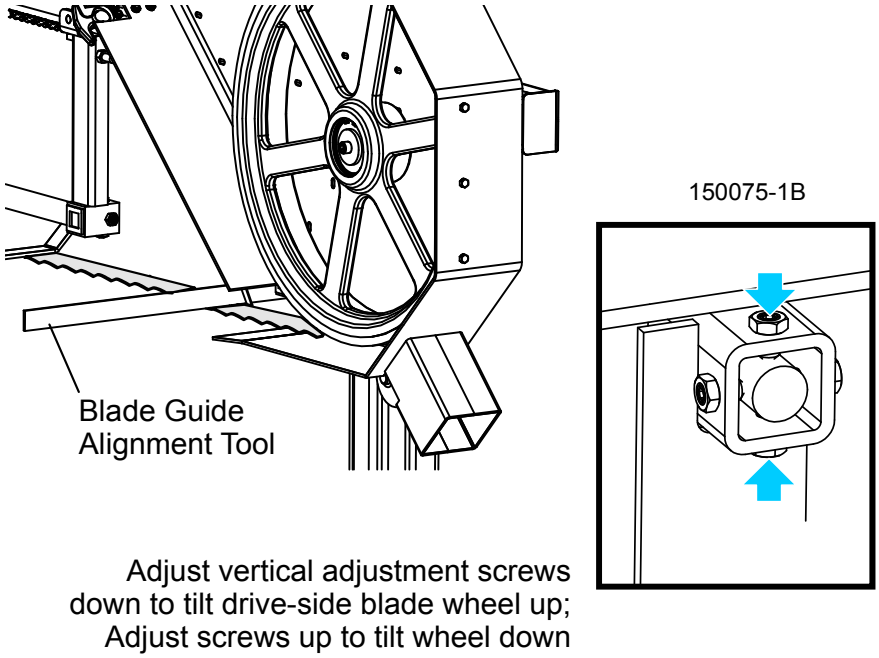

FIG. 7-14

5. Recheck the vertical tilt of the drive-side blade wheel with the blade guide alignment tool. Readjust the blade wheel as necessary until the front and rear of the tool are the same distance from the bed rail (within 1/16" [1.5 mm]).

6. Remove the tool from the blade and reattach it near the outer blade guide assembly.

7. Measure from the tool to the bed rail at both ends of the tool. If the measurements at the front and rear ends of the tool differ by more than 1/16" (1.5 mm), adjust the vertical tilt of the idle-side blade wheel.

See Figure 7-15. Use the vertical adjustment screws to adjust the idle-side blade wheel. To tilt the wheel up, loosen the bottom adjustment screw one quarter turn. Loosen the jam nut on the top adjustment screw and tighten the screw. Tighten the top and bottom jam nuts.

To tilt the wheel down, loosen the top adjustment screw one quarter turn. Loosen the jam nut on the bottom adjustment screw and tighten the screw. Tighten the top and bottom jam nuts.

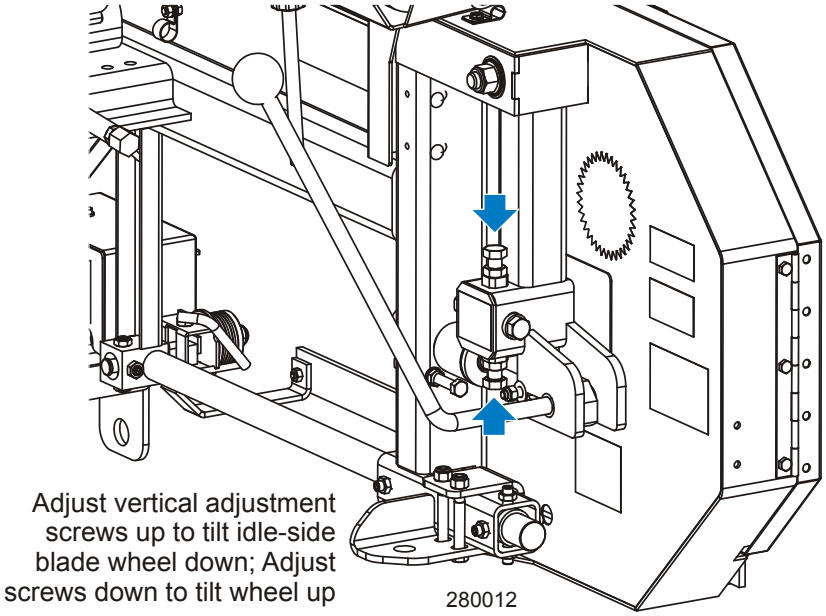

FIG. 7-15

8. Recheck the vertical tilt of the idle-side blade wheel with the blade guide alignment tool. Readjust the blade wheel as necessary until the front and rear of the tool are the same distance from the bed rail (within 1/16" [1.5 mm]).

9. Check the position of the blade on the idle-side blade wheel.

See Figure 7-16. The horizontal tilt of the blade wheel should be adjusted so that the gullet of an 1-1/4" blade is 1/8" (3 mm) out from the front edge of the wheel (±1/32 [0.75 mm]).

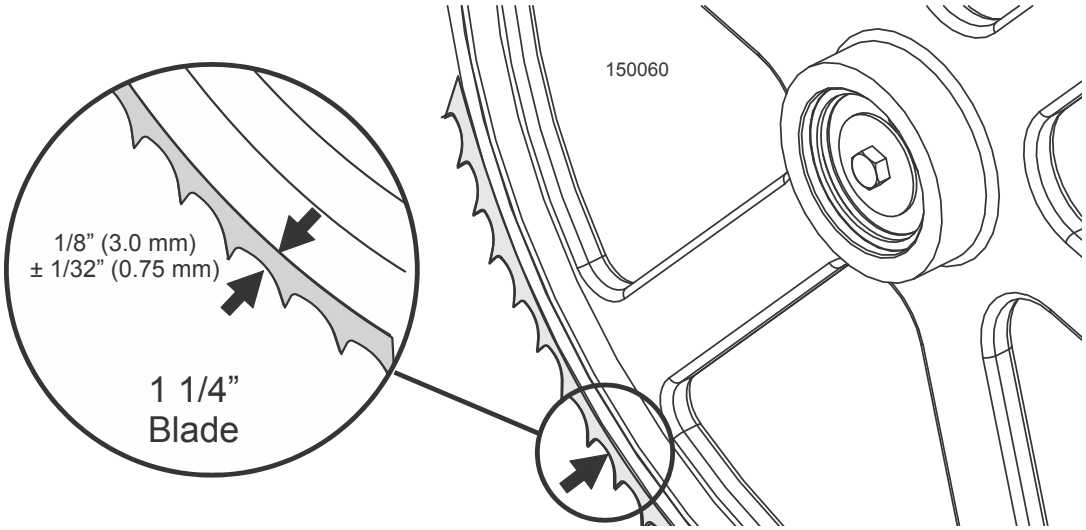

FIG. 7-16

See Figure 7-17. Use the cant control adjustment to adjust the idle-side blade wheel. If the blade is too far forward on the wheel, turn the cant control counterclockwise. If it is too far back on the wheel, turn the cant control clockwise.

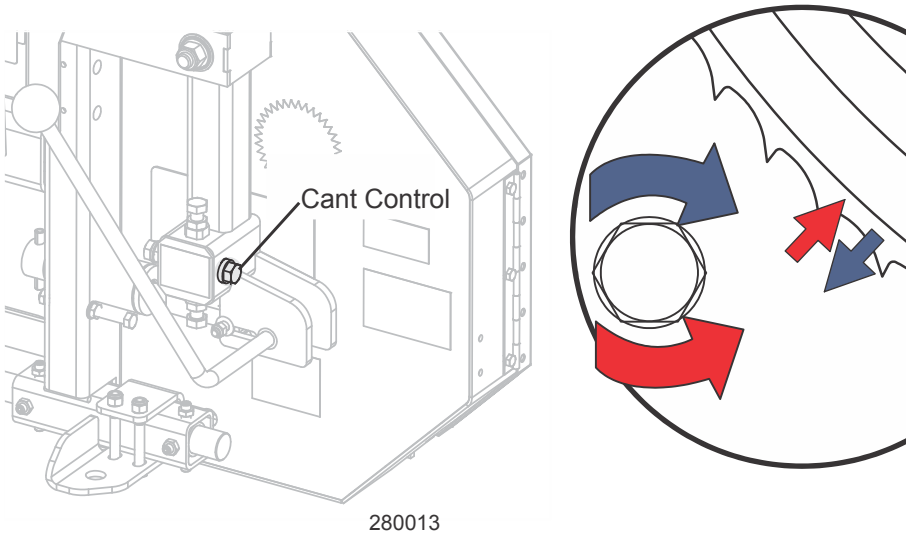

FIG. 7-17

10. Check the position of the blade on the drive-side blade wheel. The blade should be positioned on the wheel as described for the idle-side blade wheel. Adjust the drive-side blade

wheel if necessary.

See Figure 7-18. Use the horizontal adjustment screws to adjust the drive-side blade wheel. To move the blade back on the wheel, loosen the right adjustment screw one quarter turn. Loosen the jam nut on the left adjustment screw and tighten the screw. Tighten the left and right jam nuts.

To move the blade out on the wheel, loosen the left adjustment screw one quarter turn. Loosen the jam nut on the right adjustment screw and tighten the screw. Tighten the left and right jam nuts.

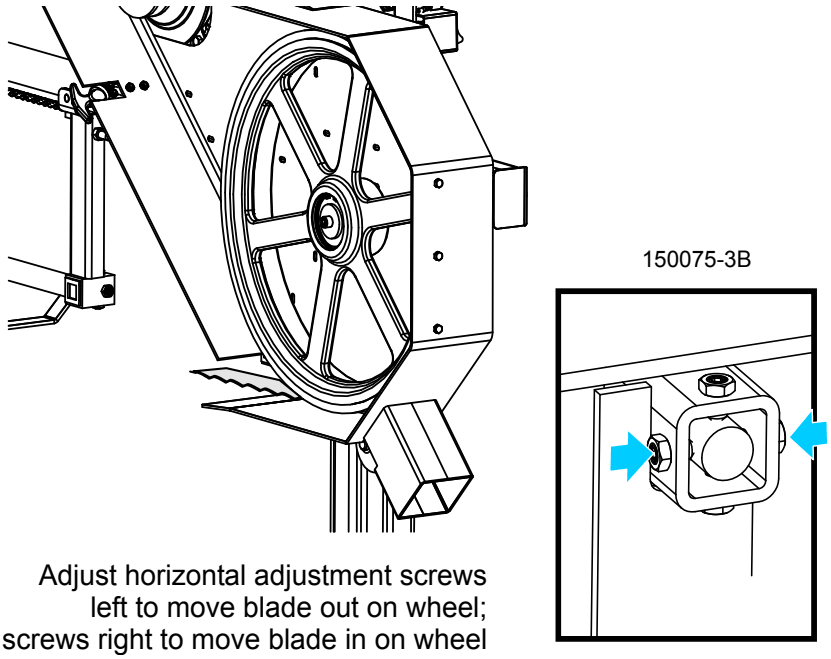

Adjust horizontal adjustment screws
left to move blade out on wheel;
Adjust screws right to move blade in on wheel

FIG. 7-18

See Figure 7-19. To adjust the saw head tilt, use the horizontal adjustment nuts. To raise the outside of the saw head, tighten the two adjustment nuts. Recheck the measurement from the blade to the bed rails and adjust the horizontal adjustment nuts until the outside of the saw head is 1/16" higher than the inside.

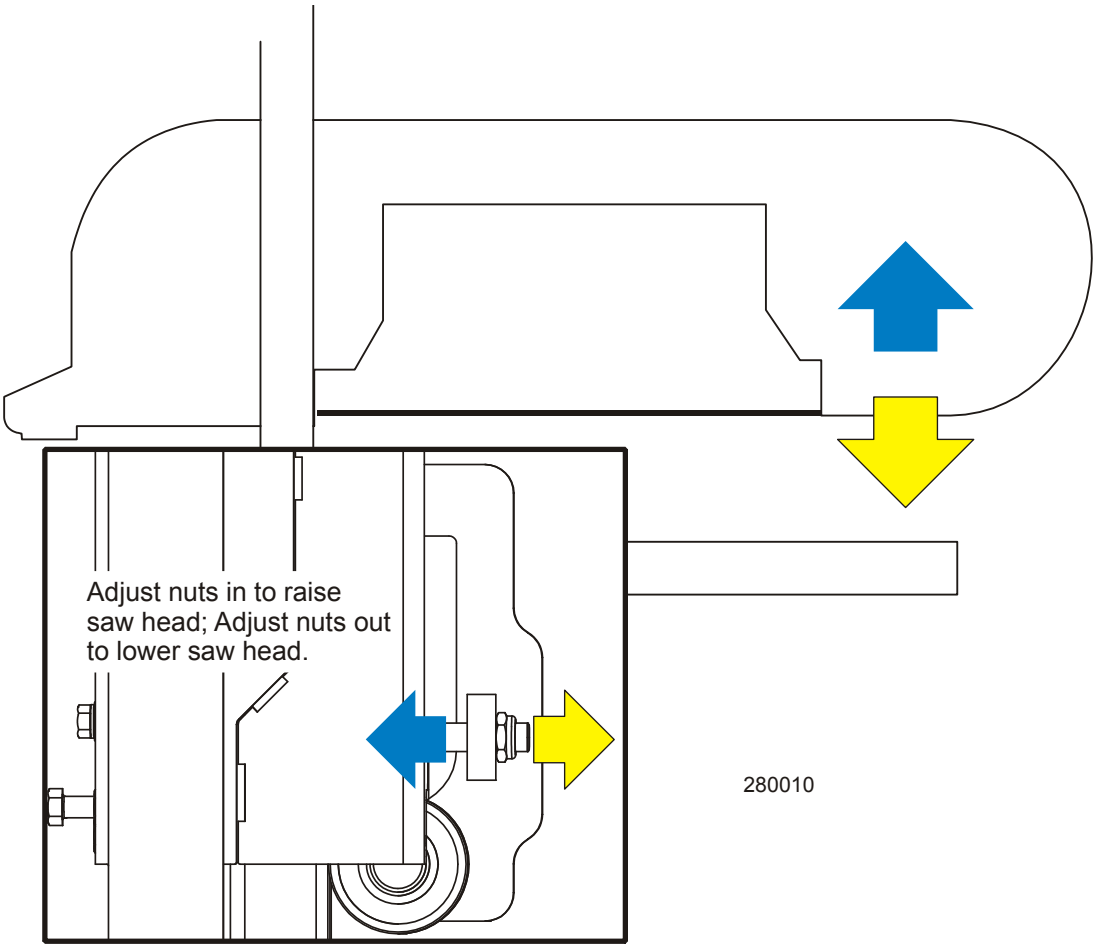

DETAIL OF LOWER ROLLER ASSEMBLY

FIG. 7-19

Bed Rail Adjustment

1. Install the log clamp at its lowest setting in a hole where the clamp is positioned 10" from the clamp stop (fourth hole from stop). Move the saw head until the blade is centered over the clamp. Raise the saw head until the blade measures 14 1/2" (360 mm) from the top of the clamp. Use a rule to determine the actual distance of the blade to the clamp.

   See Figure 7-20.

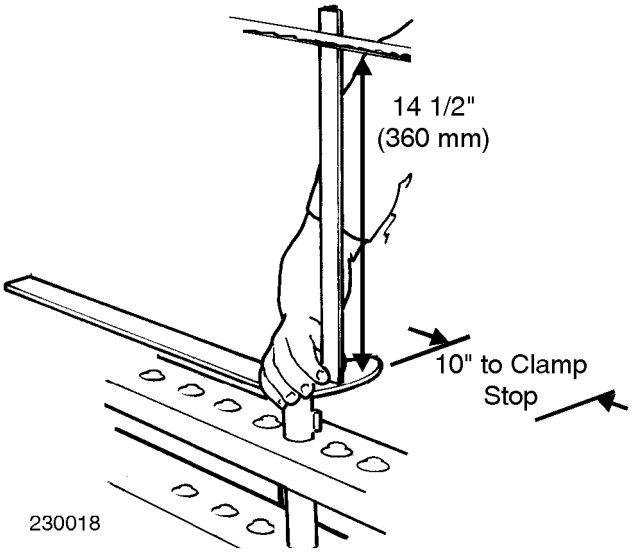

FIG. 7-20

2. Adjust the front pivot rail 90° to the main bed tube.

3. Move the saw head to center the blade over the front pivot bed rail.

4. Measure the distance from the top of the pivot rail to the bottom of the blade. Make this measurement at each end of the pivot rail.

5. The two measurements should be 15" (375 mm) (+1/32 [0.8 mm] -0).

   See Figure 7-21. Loosen the locking set screws and turn the inner height adjustment nut to adjust the height of the inner end of the pivot rail. Loosen the jam nut and turn the outer

adjustment bolt to adjust the height of the outer end of the pivot rail.

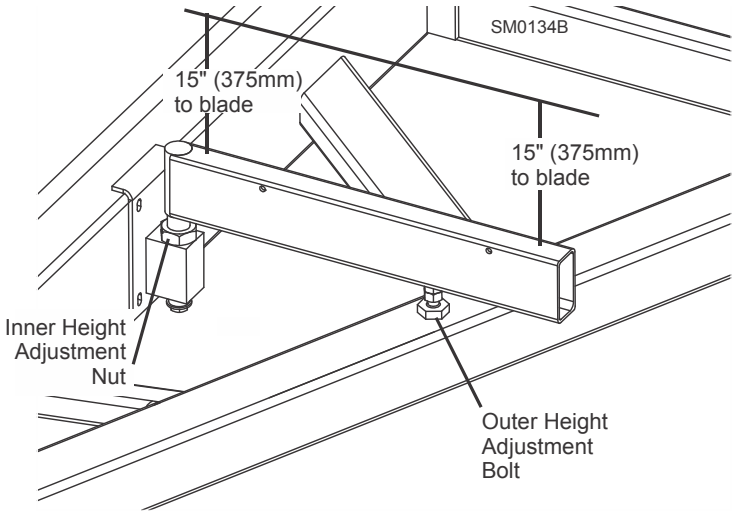

FIG. 7-21

6. Move the saw head so the blade is positioned over the center of the front main bed rail.

7. Measure the distance between the bottom of the blade and the bed rail at each end of the bed rail. The bed rail should measure 15" (375 mm) (+1/32 [0.8 mm] -0) from the blade at each end of the rail.

See Figure 7-22. Loosen the bed rail clamping bolts and turn the adjustment bolts to move the bed rails to the blade if necessary. Retighten the clamping bolts and adjustment bolt jam nuts.

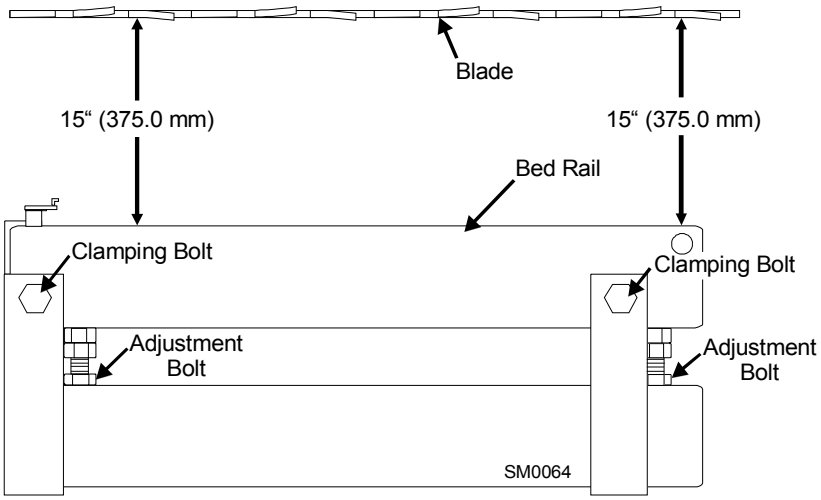

FIG. 7-22

8. Without adjusting the saw head height, check the three remaining main bed rails and the rear pivot rail. Adjust them so that all measure the same distance from the blade at both ends of the bed rail.

Blade Guide Installation

Each Wood-Mizer sawmill has two blade guide assemblies that help the blade maintain a straight cut. The two blade guide assemblies are positioned on the saw head to guide the blade on each side of the material being cut.

One blade guide assembly is mounted in a stationary position on the drive side of the saw head. This assembly is referred to as the "inner" blade guide assembly.

The other blade guide assembly is mounted on the idle side of the saw head. It is referred to as the "outer" assembly and is adjustable for various widths of materials to be processed.

> **NOTE:** Before installing the blade guide assemblies, remove the blade guide adjusting screws and apply a lubricating oil such as 10W30 or Dexron III to each screw. This will prevent the screws and threaded holes from corroding and make screw adjustments easier.

1. Install the outer blade guide assembly (with waterlube tube) to the mounting block on the blade guide arm. Position the assembly so the roller flange is 1/8" (3.0 mm) from the blade.

2. Install the inner blade guide assembly to the mounting block on the saw head. Position the assembly so the roller flange is 1/16" (1.5 mm) from the blade.

See Figure 7-23. Tighten the two previously-loosened tilt adjustment screws to secure the blade guide assembly.

Loosen the top vertical adjustment jam nut and tighten the bottom vertical adjustment jam nut to adjust the blade guide roller up so it does not touch the blade.

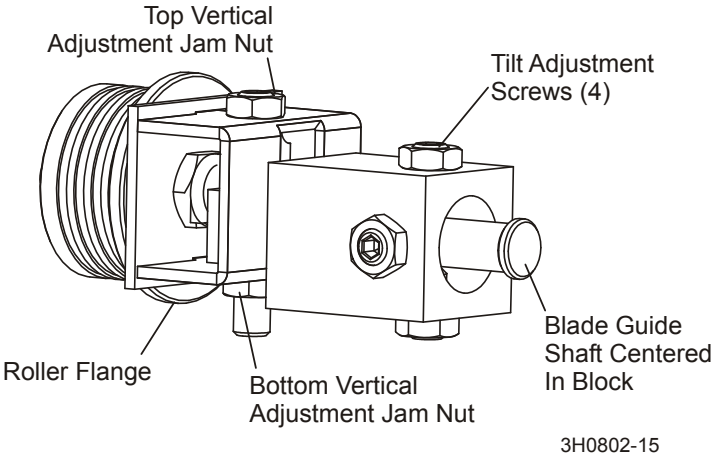

FIG. 7-23

Blade Guide Arm Alignment

The blade guide arm moves the outer blade guide in and out. If the arm becomes loose, the blade guide will not deflect the blade properly, causing inaccurate cuts. A loose blade guide arm can also cause blade vibration.

1. Adjust the blade guide arm out to 1/2" (15 mm) from fully open.

   See Figure 7-24. Use the inside top and bottom screws to adjust the arm up until the slide pad touches the saw head brace tube. Tighten the jam nuts.

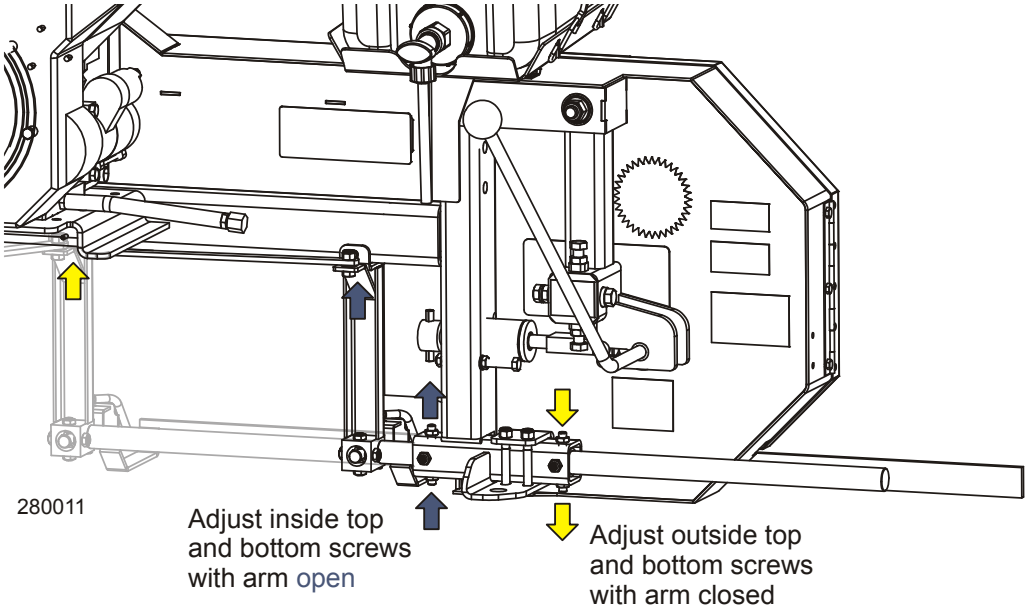

FIG. 7-24

2. Adjust the blade guide arm in all the way toward the other blade guide.

3. Use the outside top and bottom screws to adjust the arm up until the slide pad touches the saw head brace tube. Tighten the jam nuts.

   NOTE: When adjusting the blade guide arm screws, be careful not to tighten the screws too much or put the arm in a bind. Operate the blade guide arm to ensure the arm moves easily in and out.

See Figure 7-25. With the blade guide arm still all the way in toward the other blade guide, tighten all the side screws until they touch the arm. Back the screws off 1/4 turn and tighten the jam nuts.

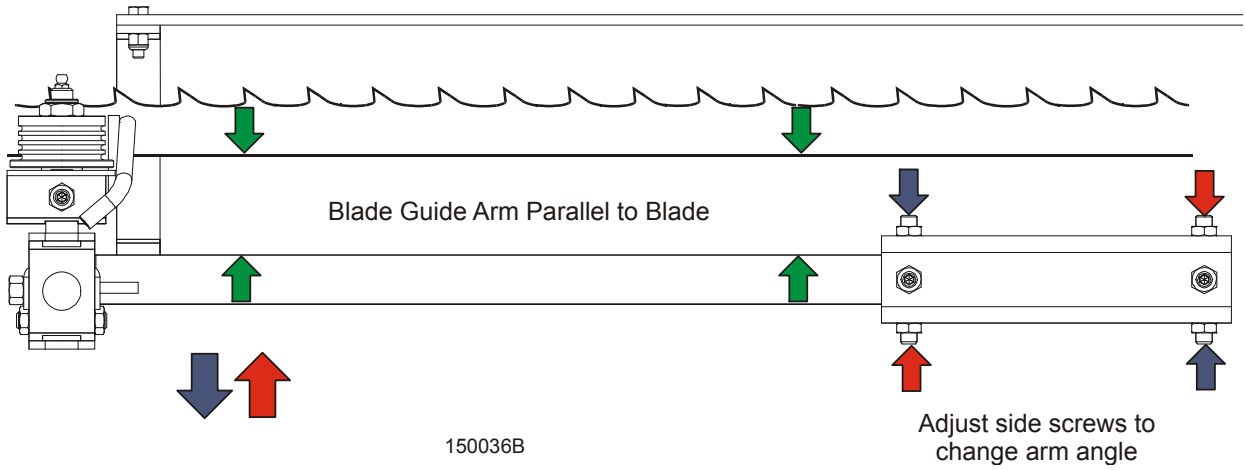

FIG. 7-25

4. Measure the distance between the blade guide arm and back edge of the blade. Adjust the appropriate side screws on the blade guide arm housing so the arm is measures the same distance from the blade at both ends of the arm.

5. To move the blade guide end of the arm toward the front of the sawmill, loosen jam nuts on the front inside screw and the rear outside screw. Turn the screws counterclockwise one full turn and tighten the jam nuts. Loosen the jam nuts on the front outside screw and the rear inside screw. Turn the screws clockwise until they touch the arm, back off 1/4” turn, and tighten the jam nuts.

6. To move the blade guide end of the arm toward the rear of the sawmill, loosen jam nuts on the front outside screw and the rear inside screw. Turn the screws counterclockwise one full turn and tighten the jam nuts. Loosen the jam nuts on the front inside screw and the rear outside screw. Turn the screws clockwise until they touch the arm, back off 1/4” turn, and tighten the jam nuts.

Blade Guide Deflection

Perform the following steps to achieve proper blade deflection with the blade guides.

1. Raise the saw head until the blade is 15" (375 mm) above a bed rail. Measure the actual distance with a tape from the top of the rail to the bottom of the blade.

2. Make sure the two vertical adjustment set screws are threaded into the blade guide shaft until they touch each other.

   See Figure 7-26.

   Loosen the bottom jam nut and tighten the top jam nut until the blade guide deflects the blade down until the bottom of the blade measures 14 3/4" (370 mm) from the bed rail.

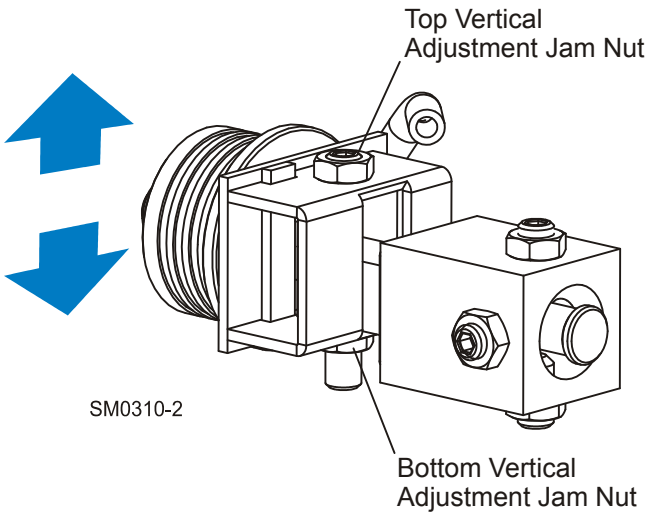

FIG. 7-26

3. Repeat for the other blade guide.

   NOTE: Be sure that the blade guide deflector rod clears the blade on both guide assemblies. The rod on the outer guide assembly should be checked with the arm all the way in and all the way out.

Blade Guide Vertical Tilt Alignment

The blade guides should be adjusted properly in the vertical plane. If the blade guides are tilted vertically, the blade will try to travel in the tilted direction.

A Blade Guide Alignment Tool (BGAT) is provided to help you measure the vertical tilt of the blade.

1. Open the adjustable blade guide arm 1/2" (15 mm) from full open.

2. Clamp the alignment tool on the blade. Position the tool close to the outer blade guide roller. Be sure the tool does not rest on a tooth or burr, and is lying flat on the blade.

   See Figure 7-27.

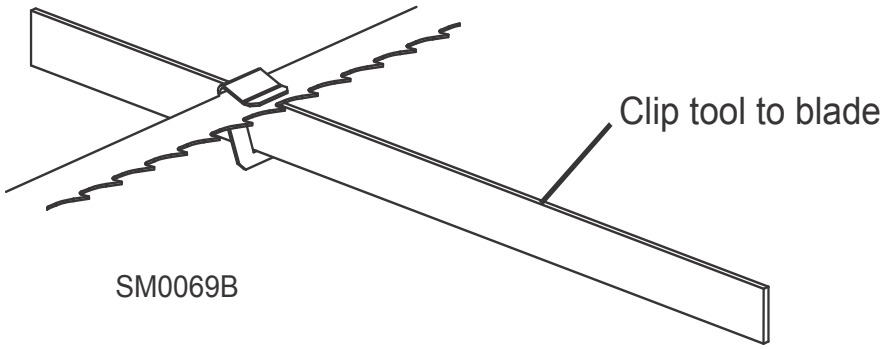

FIG. 7-27

3. Move the carriage so that the front end of the tool is positioned above the bed rail. Measure the distance from the bed rail to the bottom edge of the tool.

4. Move the carriage so that the back end of the tool is positioned above the bed rail. Measure the distance from the bed rail to the bottom edge of the tool.

5. If the measurement from the tool to the bed rail is not equal within 1/32" (.75 mm), adjust the vertical tilt of the outer blade guide roller.

6. Loosen one set screw at the side of the blade guide assembly.

See Figure 7-28. Loosen the jam nuts on the top and bottom vertical tilt adjustment screws. To tilt the roller up, loosen the bottom screw and tighten top screw. To tilt the roller down, loosen the top screw and tighten the bottom screw. Tighten the jam nuts and recheck the tilt of the blade.

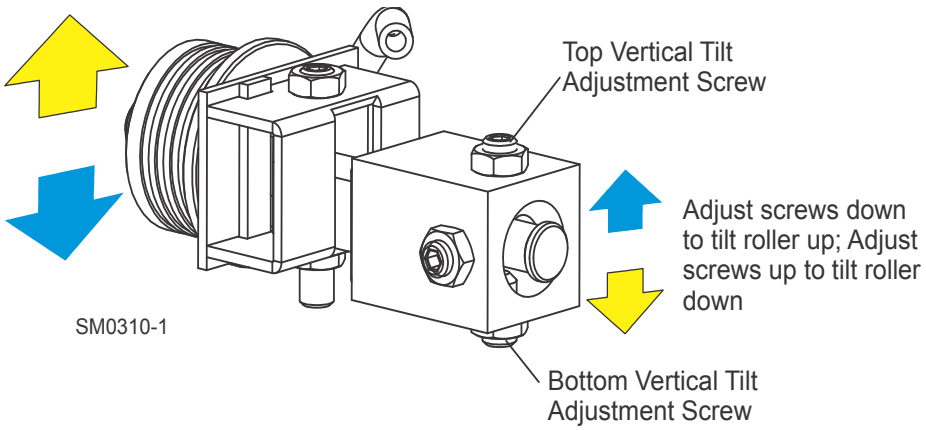

FIG. 7-28

7. Move the blade guide alignment tool close to the inner blade guide roller assembly and repeat the above steps. Adjust the vertical tilt of the inner blade guide if necessary.

8. After adjusting the vertical tilt of the blade guides, recheck the blade deflection and adjust if necessary.

Blade Guide Horizontal Tilt Adjustment

If the blade guides are tilted in the wrong direction horizontally, the back of the blade may contact the flange as the roller is spinning down, causing it to push the blade away from the guide roller.

1. Remove the blade guide alignment tool from the blade and adjust the blade guide arm halfway in.

2. Remove the clip from the blade guide alignment tool. Place the tool against the face of the outer blade guide roller.

   See Figure 7-29.

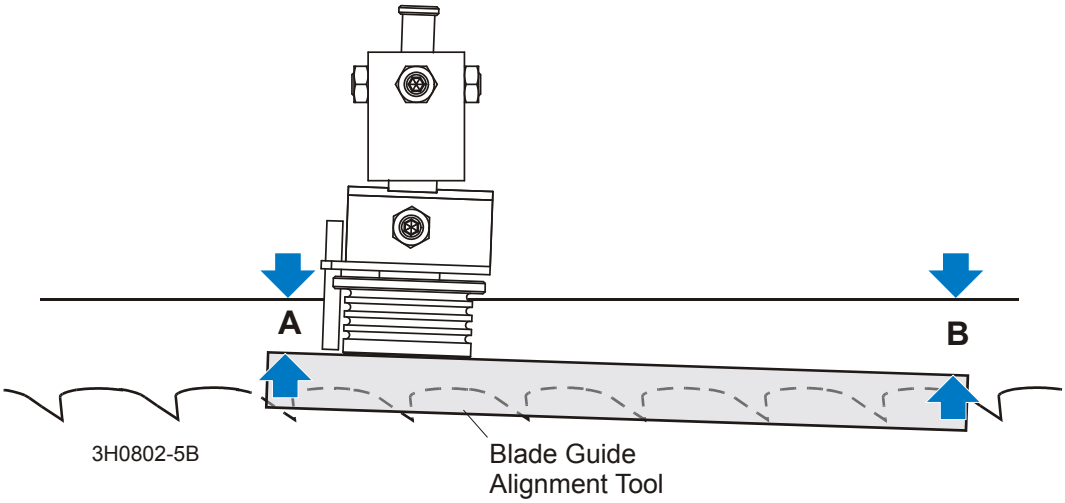

FIG. 7-29

3. Measure between the back edge of the blade and the tool at the end closest to the inner blade guide ("B").

4. Measure between the back edge of the blade and the other end of the tool ("A").

   The roller should be tilted slightly to the left (’A’ 1/8" [3 mm] less than ’B’ ±1/8" [3 mm]).

See Figure 7-30. Loosen the jam nuts on the horizontal tilt adjustment screws. To tilt the roller left, loosen the right screw and tighten left screw. To tilt the roller right, loosen the left screw and tighten the right screw. Tighten the jam nuts and recheck the tilt of the blade.

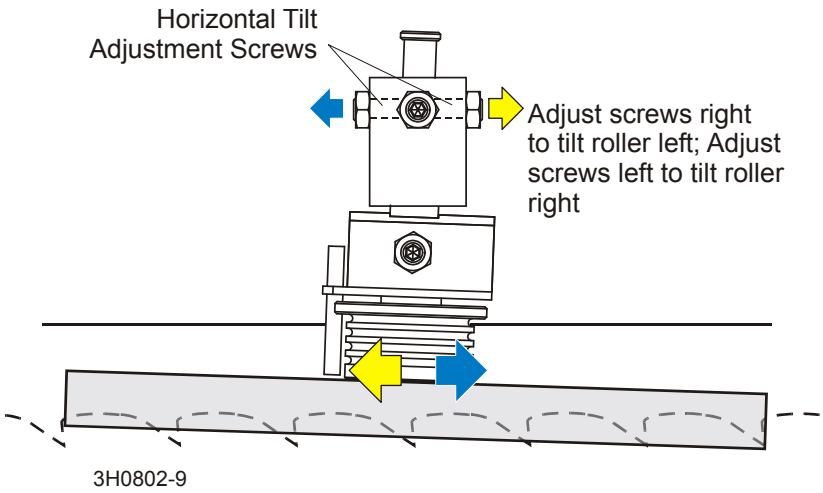

FIG. 7-30

5. Repeat the above steps for the inner blade guide roller assembly.

NOTE: Once the blade guides have been adjusted, any cutting variances are most likely caused by the blade. *See Blade Handbook, Form #600.*

Blade Guide Flange Spacing

Each blade guide must be adjusted so the roller flange is the correct distance from the back edge of the blade. If the flange is too close to or too far from the blade, the sawmill will not cut accurately.

> **HINT:** When adjusting blade guide spacing, loosen the top set screw and one side set screw only. This will ensure horizontal and vertical tilt adjustments are maintained when the adjustment screws are retightened.

1. Measure the distance between the flange on the outer blade guide roller to the back edge of the blade. This distance should measure 1/8" (3.0 mm). Adjust the roller back or forward if necessary.

   See Figure 7-31. Loosen the top and one side screw shown. Tap the blade guide forward or backward until properly positioned. Retighten the screws and jam nuts.

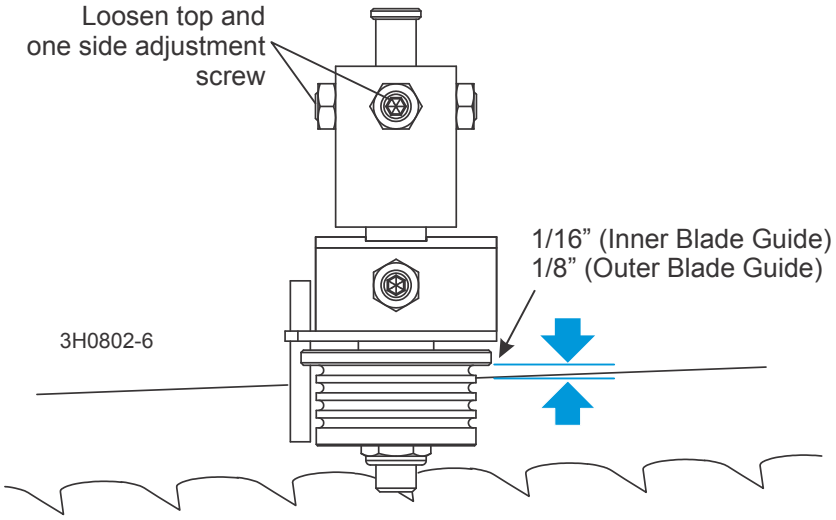

FIG. 7-31

2. Measure the distance between the flange on the inner blade guide roller to the back edge of the blade. This distance should measure 1/16" (1.5 mm). Adjust the roller back or forward if necessary.

Side Support Alignment

Logs and boards are clamped against the side supports when sawing. The sides supports must be square to the bed to ensure square lumber.

1. Swing a side support down and measure between the face of the support and the main bed tube. The distance at the top of the side support ('B') should be equal to or no more than 1/32" (0.8 mm) greater than the distance at the base of the side support ('A'). Adjust the horizontal tilt of the side support if necessary.

   See Figure 7-32. Loosen the two adjustment plate mounting bolts. Use a mallet to move the plate until the side support is parallel to the bed tube in the horizontal position. Retighten the mounting bolts.

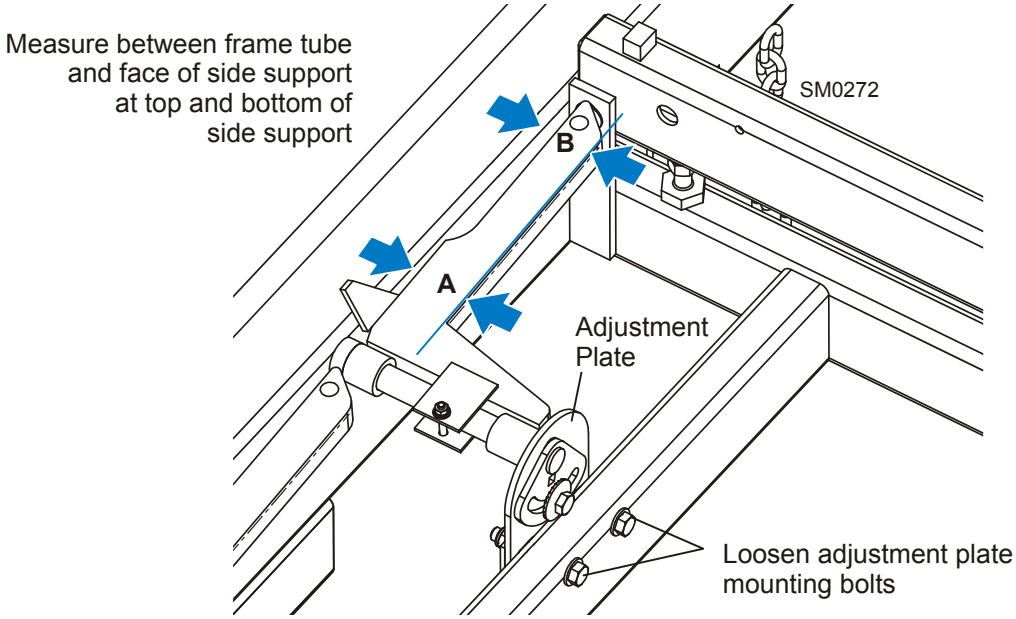

FIG. 7-32

2. Repeat the horizontal check for the remaining side supports. Adjust as necessary.

3. Place square alignment tubes (Part No. S12831 - 2 required) across the bed rails. Swing a side support up so that it is vertical.

4. Pull back at the top of the support to eliminate slack as if a log were being clamped against it.

5. Place a square against the face of the side support. The side support should be square or slightly tilted forward 1/32" (0.8 mm). Adjust the vertical tilt of the side support if necessary.

See Figure 7-33. Loosen the side support mounting bolt. Use a 3/8" ratchet to rotate the pin until the side support is square to the bed.

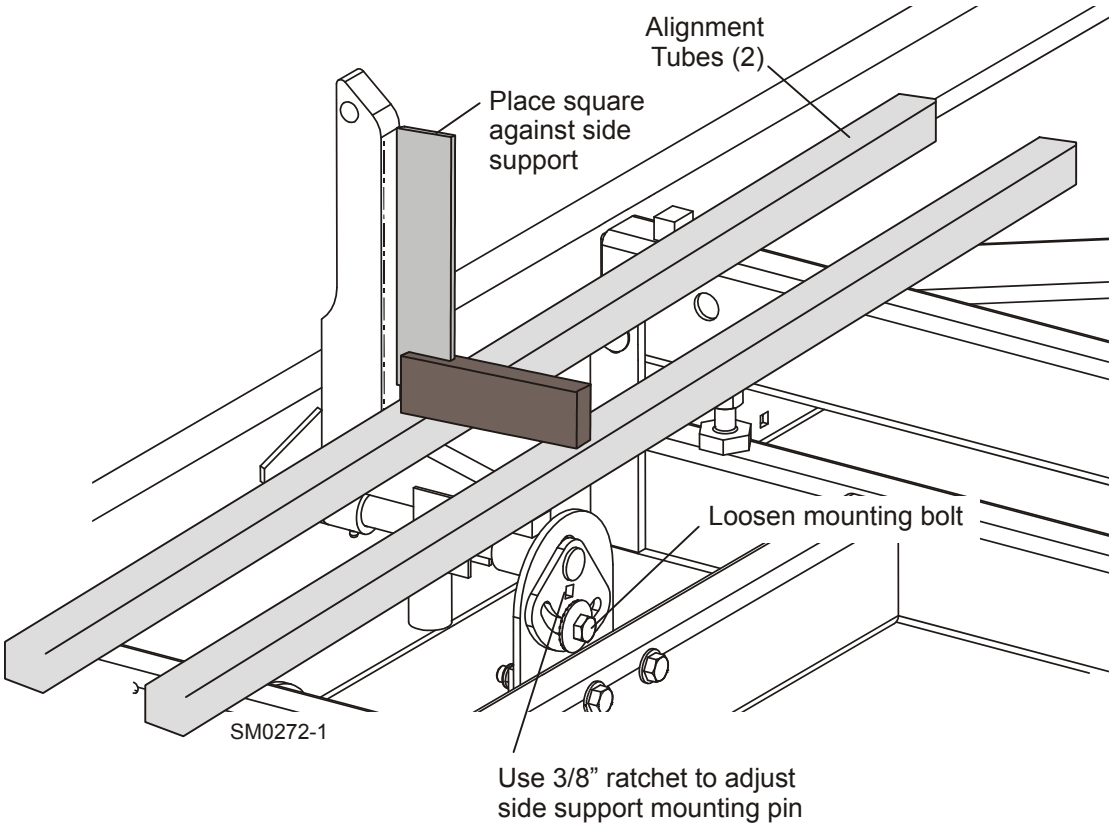

FIG. 7-33

6. Repeat the vertical check for the remaining side supports and adjust as necessary.

Saw Head Tilt

As the blade enters a wide log or cant, the outside of the saw head will drop down slightly. To compensate for the drop, the saw head is adjusted 1/16" (1.5 mm) higher at the outside.

1. Move the saw carriage so the blade is positioned over a bed rail. Adjust the blade guide arm to 1/2" (15 mm) from full open. The saw head should still be adjusted so the blade is 14 3/4" (375 mm) above the bed rails.

   See Figure 7-34.

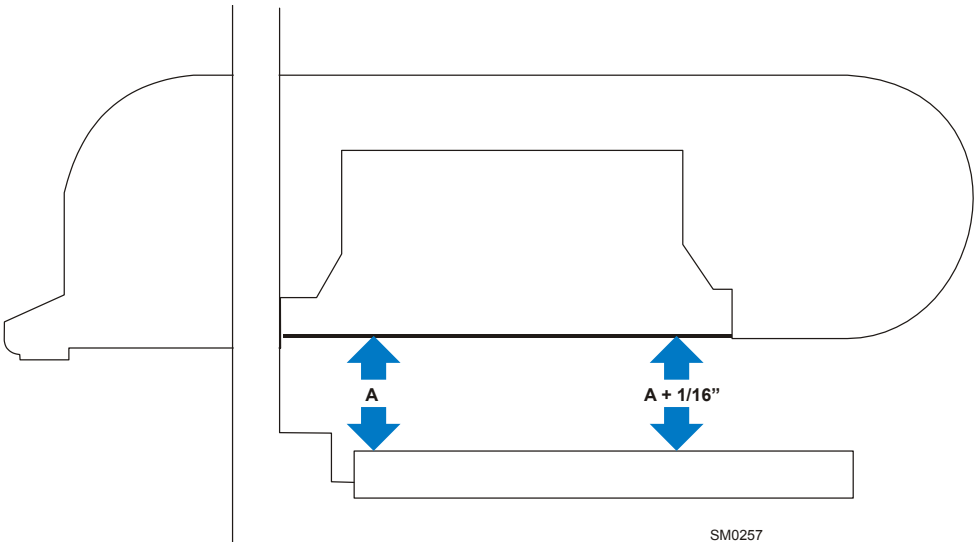

FIG. 7-34

2. Measure from the blade to the bed rail near the outer blade guide assembly. This measurement should be 1/16" (1.5 mm) higher than the inner measurement.

See Figure 7-35. To adjust the saw head tilt, use the horizontal adjustment nuts. To raise the outside of the saw head, tighten the two adjustment nuts. Recheck the measurement from the blade to the bed rails and adjust the horizontal adjustment nuts until the outside of the saw head is 1/16" higher than the inside.

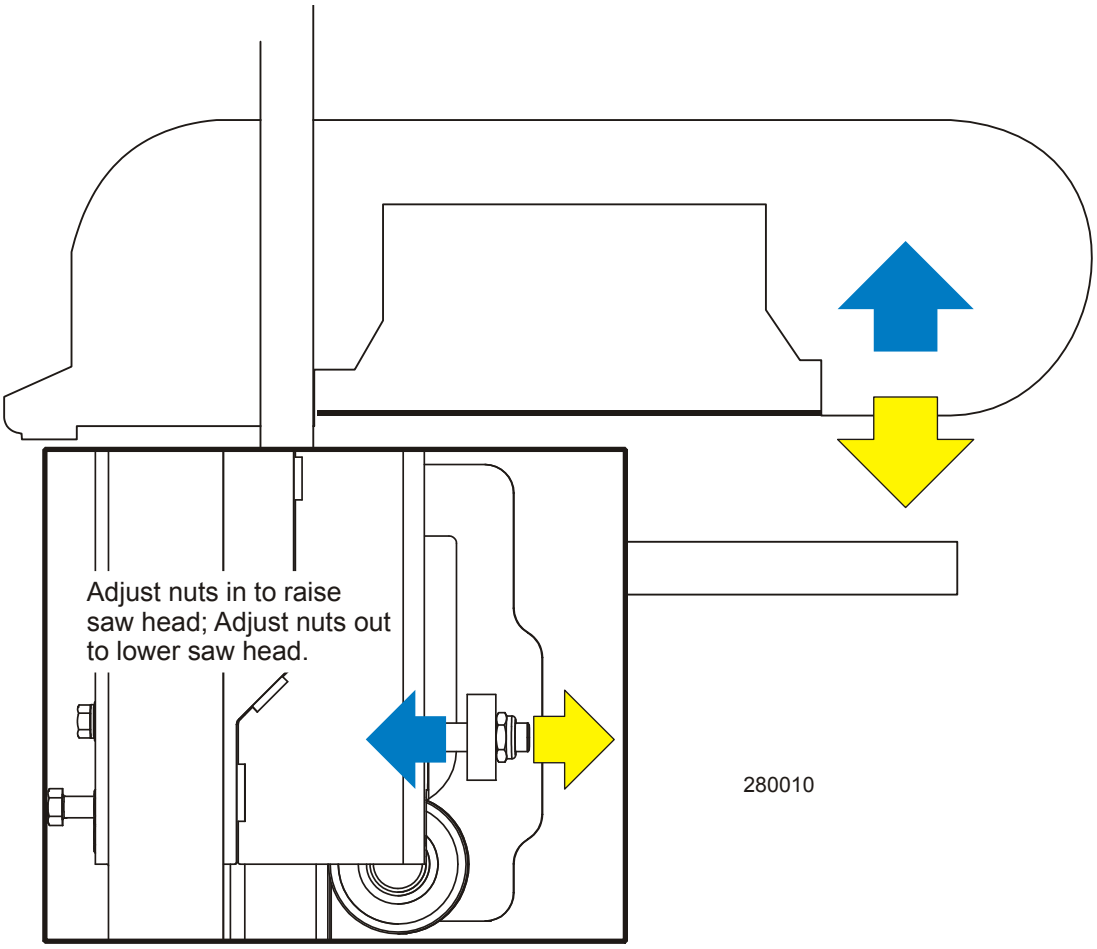

DETAIL OF LOWER ROLLER ASSEMBLY

FIG. 7-35

Blade Height Scale Adjustment

After the entire sawmill has been aligned and all adjustments made, check that the blade height scale indicates the true distance from the blade to the bed rails.

1. Move the saw carriage so the blade is positioned directly above one of the bed rails. Measure from the bottom edge on a down-set tooth of the blade to the top of the bed rail, near the inner blade guide assembly.

2. View the blade height scale with eyes level with the indicator. The scale should indicate the actual distance from the blade to the bed rail. Adjust the indicator if necessary.

   See Figure 7-36. Loosen the indicator bracket mounting bolts. Adjust the bracket up or down until the indicator is aligned with the correct mark on the scale (+0 -1/32 [0.8 mm]). Retighten the bracket mounting bolts.

   For example, if the measurement from the down-set tooth of the blade to the bed rail was 14 3/4" (375 mm), make sure the indicator reads 14 3/4" (375 mm) on the scale.

A
alignment
    main bed rails 22
B
blade
    breakage, troubleshooting 1
    installation 7
    tensioning 8
    tracking 10
blade guide arm
    operation 17
C
chain
    maintenance 7
    up/down tension 11
clutch/brake lever
    operation 18
L
leveling logs 15
loading logs 14
M
maintenance
    blade guide 2
    blade wheel belts 8
    carriage track/wipers 4
    drive belt 9
    feed rope 14
    mast rails 5, 6
    miscellaneous 7
    part wear life 1
    sawdust removal 3
    up/down 11
O
operation
    edging 24
    sawing 22
P
power feed
    speed adjustment 20
S
safety
    instructions 2
    lockout procedure 13
    symbols 1
scale

blade height operation 25
inch height 25
quarter inch 26
service information
branch locations 3
customer & sawmill ID 7
general contact info 2
setup
portable sawmill 3
stationary sawmill 1
T
tensioner
maintenance 7
troubleshooting 1
sawing problems 1
turning logs 14
U
up/down
operation 16
W
water lube
operation 27