PARTS LIST			
ITEM	QTY	PART NUMBER	DESCRIPTION
27	2	2707-00-AP-28	FLOOR PLATE B
28	7	2707-00-AP-29	FLOOR PLATE A

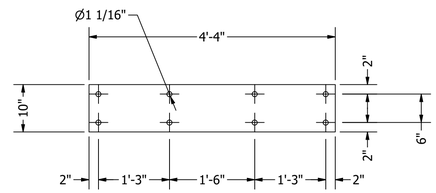

ITEM 27 DETAIL
SCALE 3/4" = 1'-0"

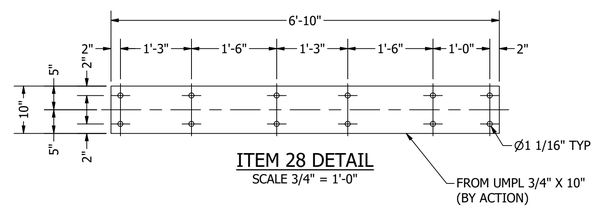

ITEM 28 DETAIL
SCALE 3/4" = 1'-0"

ANCHOR PLATE NOTES

1. EPOXY FLOOR PLATES TO FLOOR WITH: CONCESSIVE PASTE (LPL) SUITABLE ABOVE 60° F. OR (SPL) WHICH MAY BE USED IN A TEMPERATURE RANGE OF 35 TO 60° F. PER MANUFACTURER'S RECOMMENDATIONS (BY OTHERS).

   CONTACT: BASF BUILDING SYSTEMS
   889 VALLEY PARK DR
   SHAKOPEE, MN 55379
   (800) 433-9517
   WWW.CHEMREX.COM

2. USE NON-LEAD TYPE ANCHOR BOLTS SUITED FOR FATIGUE APPLICATIONS (BY OTHERS)

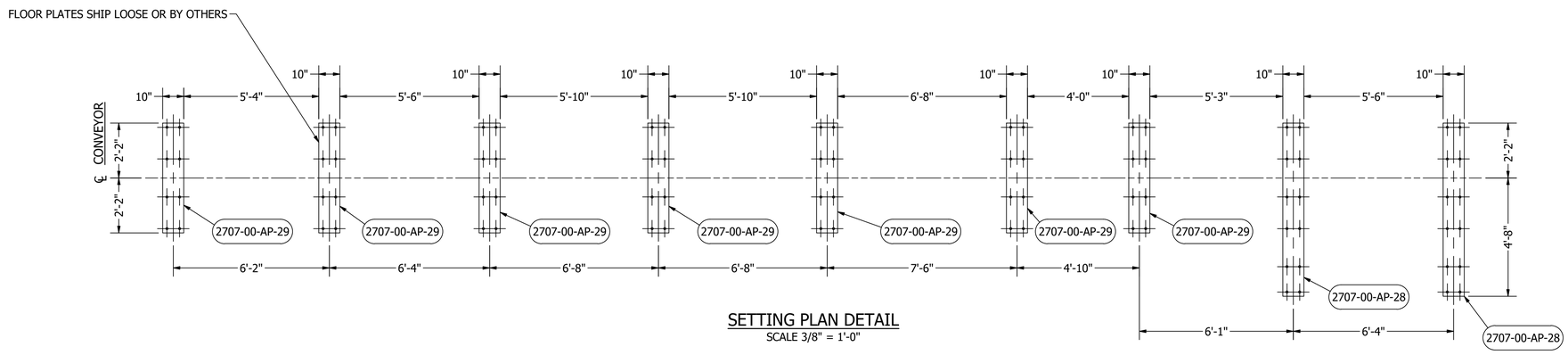

SETTING PLAN DETAIL
SCALE 3/8" = 1'-0"

WM# SLPT-017-60-310

CUSTOMER APPROVAL AND DATE: GARY V. LINDE 5/2/2022

STATIC LOAD	DYNAMIC LOADING	MODEL / SIZE	OPERATING SPECIFICATIONS	NOTES
TOTAL	TOTAL			
29,655 LBS WITHOUT MATERIAL ACTION SUPPLIED EQUIPMENT ONLY	1,700 LBS 2,020 LBS / 2,020 LBS 1,700 LBS ACTION EQUIPMENT COMPANY, INC. ASSUMES NO RESPONSIBILITY FOR THE DESIGN OF CONVEYOR FOUNDATIONS AND / OR SUPPORTING STEEL.	(1) MODEL 36/46" WIDE X 12/12" DEEP X 55'-6" LONG XHDB VIBRATING CONVEYOR MATERIAL DESCRIPTION SAWDUST, CHIPS, TRIM BLOCKS, & STRIPS UP TO 16' LG.	PAN STROKE 22mm / BALANCER STROKE 23mm ECCENTRIC SHAFT RPM = 454 THIRD ANGLE PROJECTION DRAWING TOLERANCES: UNLESS OTHERWISE SPECIFIED DECIMAL .X = ± .06" .XX = ± .010" .XXX = ± .005" FRACTION X/X = ± 1/16" ANGLE X° = ± 1/2" DIMENSIONS: INCHES UNLESS OTHERWISE SPECIFIED	PAINT ORANGE (RAL # 2001) w/Safety Yellow Drive Guard SHIPPING BRACES MUST BE REMOVED BEFORE STARTING CONVEYOR. CUSTOMER TO SUPPLY STRUCTURAL SUPPORTS FOR MACHINE IF NOT PROVIDED BY ACTION.

THIS DRAWING WITH THE DESIGNS, IDEAS, AND DETAILS SHOWN HEREON IS THE PROPERTY OF ACTION EQUIPMENT COMPANY, INC., NEWBERG, OREGON, AND IS TO BE RETURNED UPON REQUEST. IT SHALL NOT BE USED, DISCLOSED TO OTHERS OR COPIED IN WHOLE OR IN PART WITHOUT EXPRESS WRITTEN AUTHORIZATION BY ACTION EQUIPMENT COMPANY, INC. ALL RIGHTS OF DESIGN OR INVENTION ARE RESERVED.

FOUNDATIONS, ANCHOR BOLTS, EMBEDDED STEEL FOR MOUNTING UNIT IN PLACE, SUPPORTS, MOTOR CONTROLS, CONDUIT AND ELECTRICAL WIRING, ALL NECESSARY CHUTEWORK, HOPPERS, SKIRTING AND ALL ITEMS NOT SHOWN INCLUDING UNLOADING AND ERECTION TO BE FURNISHED BY CUSTOMER UNLESS NOTED OTHERWISE.

ACTION EQUIPMENT COMPANY, INC.
P.O. BOX 3100 NEWBERG, OREGON 97132
PHONE (503) 537 - 1111 sales@actionconveyors.com
www.actionconveyors.com

SAFETY

SAFETY HAS BEEN GIVEN CONSIDERATION IN THIS ARRANGEMENT. PLEASE REVIEW MAINTENANCE MANUAL PRIOR TO INSTALLATION.

ACTION VIBRATORY EQUIPMENT

TITLE
LINE 2 WASTE
XHDB CONVEYOR
for
WINDFALL LUMBER
WINDFALL, AZ

REV.	DATE	REVISION
E	7/18/2022	AS BUILT
D	6/2/2022	CHANGED RAL, FLOOR PLATES BY ACTION
C	5/2/2022	APPROVED FOR CONSTRUCTION
B	4/29/2022	ADDED IN-FEED FLARE
A	4/26/2022	REVISED LAYOUT

DRAWN CBH 5/4/2022
APPROVED
SIZE D
DWG NO. 2707-02-GA-01-01
SHEET 3 OF 3