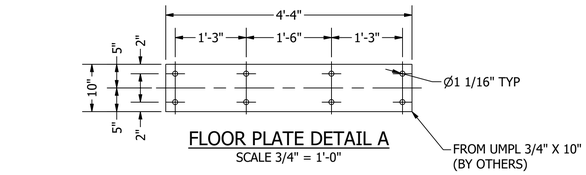

FLOOR PLATE DETAIL A
SCALE 3/4" = 1'-0"

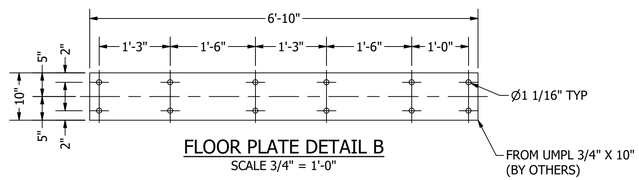

FLOOR PLATE DETAIL B
SCALE 3/4" = 1'-0"

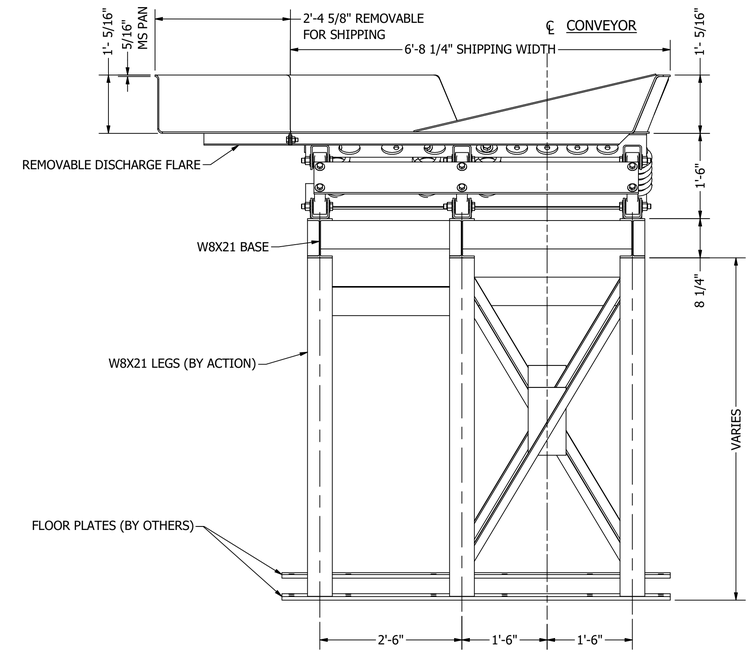

VIEW D-D
SCALE 3/4" = 1'-0"

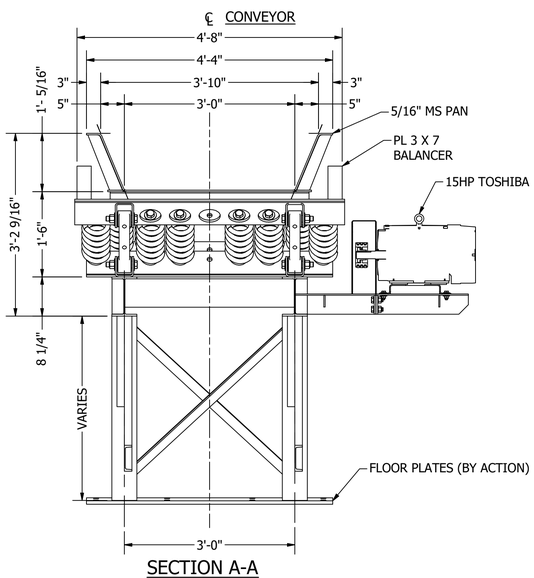

SECTION A-A
SCALE 3/4" = 1'-0"

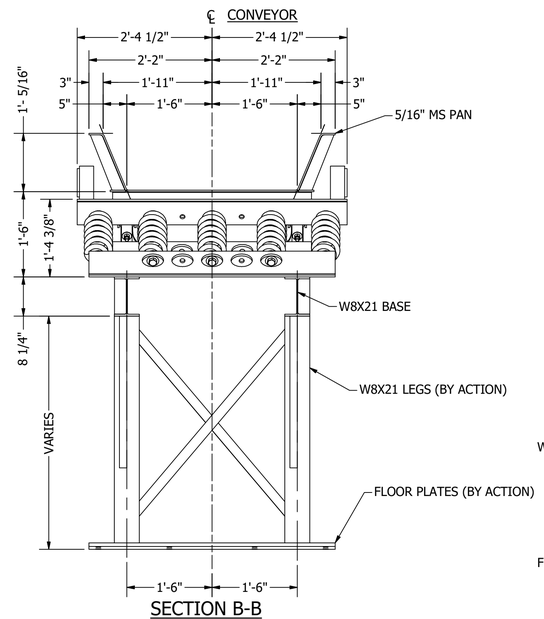

SECTION B-B
SCALE 3/4" = 1'-0"

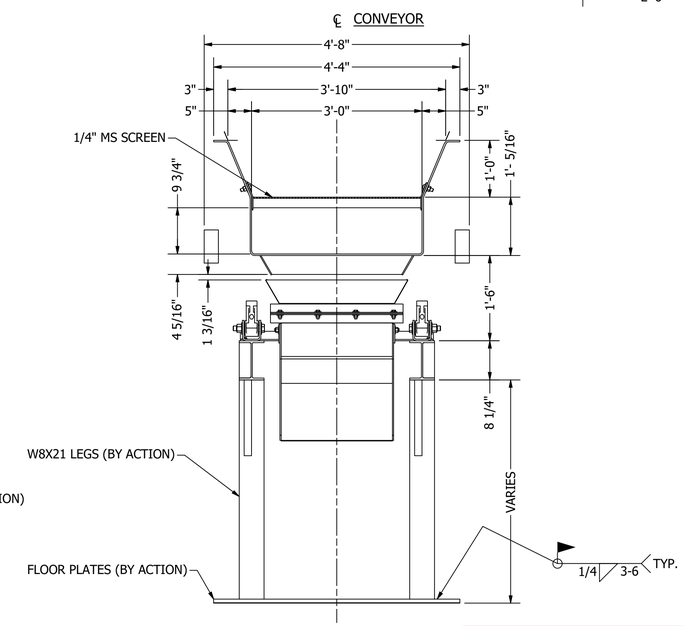

SECTION C-C
SCALE 3/4" = 1'-0"

ANCHOR PLATE NOTES

1. EPOXY FLOOR PLATES TO FLOOR WITH: CONCESSIVE PASTE (LPL) SUITABLE ABOVE 60° F. OR (SPL) WHICH MAY BE USED IN A TEMPERATURE RANGE OF 35 TO 60° F. PER MANUFACTURER'S RECOMMENDATIONS (BY OTHERS).

   CONTACT: BASF BUILDING SYSTEMS
   889 VALLEY PARK DR
   SHAKOPEE, MN 55379
   (800) 433-9517
   WWW.CHEMREX.COM

2. USE NON-LEAD TYPE ANCHOR BOLTS SUITED FOR FATIGUE APPLICATIONS (BY OTHERS)

WM# SLPT-017-60-310

CUSTOMER APPROVAL AND DATE: 5/2/2022 GARY V. LINDE

STATIC LOAD	DYNAMIC LOADING	MODEL / SIZE	OPERATING SPECIFICATIONS	NOTES
TOTAL	TOTAL		PAN STROKE 22mm / BALANCER STROKE 23mm	
29,655 LBS WITHOUT MATERIAL	1,700 LBS; 2,020 LBS; 2,020 LBS; 1,700 LBS	(1) MODEL 36/46" WIDE X 12/12" DEEP X 55'-6" LONG XHDB VIBRATING CONVEYOR	ECCENTRIC SHAFT RPM = 454	
ACTION SUPPLIED EQUIPMENT ONLY	ACTION EQUIPMENT COMPANY, INC. ASSUMES NO RESPONSIBILITY FOR THE DESIGN OF CONVEYOR FOUNDATIONS AND / OR SUPPORTING STEEL.	MATERIAL DESCRIPTION: SAWDUST, CHIPS, TRIM BLOCKS, & STRIPS UP TO 16' LG.	THIRD ANGLE PROJECTION; DRAWING TOLERANCES: UNLESS OTHERWISE SPECIFIED DECIMAL X = ± .06" XX = ± .010" XXX = ± .005"; FRACTION X/X = ± 1/16"; ANGLE X° = ± 1/2"; DIMENSIONS: INCHES UNLESS OTHERWISE SPECIFIED	PAINT: ORANGE (RAL # 2001) w/Safety Yellow Drive Guard SHIPPING BRACES MUST BE REMOVED BEFORE STARTING CONVEYOR. CUSTOMER TO SUPPLY STRUCTURAL SUPPORTS FOR MACHINE IF NOT PROVIDED BY ACTION.

THIS DRAWING WITH THE DESIGNS, IDEAS, AND DETAILS SHOWN HEREON IS THE PROPERTY OF ACTION EQUIPMENT COMPANY, INC., NEWBERG, OREGON, AND IS TO BE RETURNED UPON REQUEST. IT SHALL NOT BE USED, DISCLOSED TO OTHERS OR COPIED IN WHOLE OR IN PART WITHOUT EXPRESS WRITTEN AUTHORIZATION BY ACTION EQUIPMENT COMPANY, INC. ALL RIGHTS OF DESIGN OR INVENTION ARE RESERVED.

FOUNDATIONS, ANCHOR BOLTS, EMBEDDED STEEL FOR MOUNTING UNIT IN PLACE, SUPPORTS, MOTOR CONTROLS, CONDUIT AND ELECTRICAL WIRING, ALL NECESSARY CHUTEWORK, HOPPERS, SKIRTING AND ALL ITEMS NOT SHOWN INCLUDING UNLOADING AND ERECTION TO BE FURNISHED BY CUSTOMER UNLESS NOTED OTHERWISE.

ACTION EQUIPMENT COMPANY, INC.
P.O. BOX 3100 NEWBERG, OREGON 97132
PHONE (503) 537 - 1111 sales@actionconveyors.com
www.actionconveyors.com

SAFETY
SAFETY HAS BEEN GIVEN CONSIDERATION IN THIS ARRANGEMENT. PLEASE REVIEW MAINTENANCE MANUAL PRIOR TO INSTALLATION.

ACTION VIBRATORY EQUIPMENT

TITLE: LINE 2 WASTE XHDB CONVEYOR for WINDFALL LUMBER
WINDFALL, AZ

DRAWN	CBH	5/4/2022	SIZE
APPROVED			D

REV.	DATE	REVISION
E	7/18/2022	AS BUILT
D	6/2/2022	CHANGED RAL, FLOOR PLATES BY ACTION
C	5/2/2022	APPROVED FOR CONSTRUCTION
B	4/29/2022	ADDED IN-FEED FLARE
A	4/26/2022	REVISED LAYOUT

DWG NO. 2707-02-GA-01-01