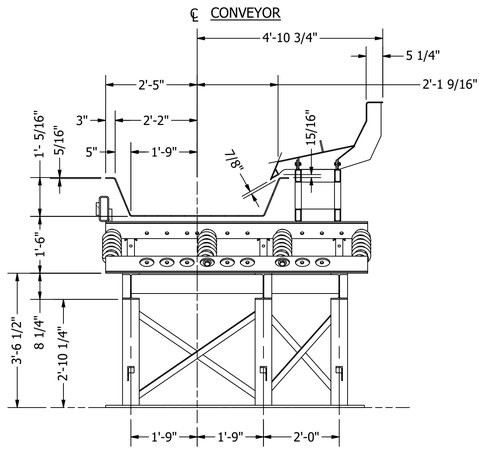

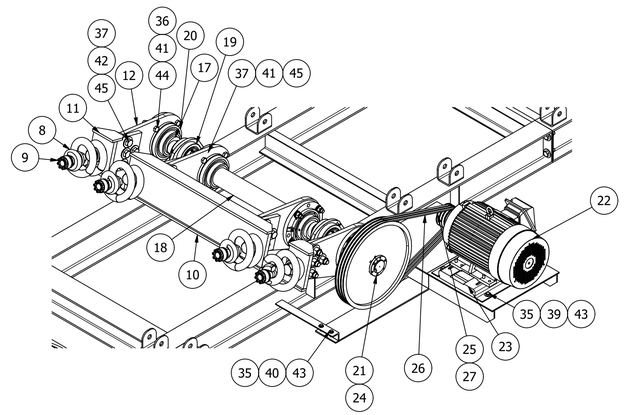

SHIPPING NOTE	
ITEM	WEIGHT
SEC A	12,400 LBS
SEC B	8,900 LBS
SEC C	7,500 LBS
HIGH SIDE	1,600 LBS
FLOOR PLATES	1,600 LBS
MOTOR	500 LBS
TOTAL	30,300 LBS

PARTS LIST

EO	ITEM	QTY	PART NUMBER	DESCRIPTION
	28	1	BG 20HP 20.0-4.8 RH	BELT GUARD 20HP 20.0-4.8 RH
	29	7	TIEBAR 42 PAN-SA-A	TIEBAR 42" CONVEYOR
	30	2	2707-00-DT-17	TIEBAR 42" CONVEYOR
	31	2	TIEBAR 42 SP-X-SA-B	PAN TIE BAR 42" WIDE - SPECIAL
	32	1	MDI XR-48-X	48" SEARCH COIL
	33	4	2707-00-AP-54	FLOOR PLATE D
	34	7	2707-00-AP-55	FLOOR PLATE C
	35	4	SCRWHC050X0150C5BZP	HHCS 1/2 X 1 1/2 G5
	36	4	SCRWHC037X0125C5BZP	HHCS 3/8 X 1 1/4 G5
	37	24	SCRWHC075X0350C5BZP	Hex Cap Screw
	38	16	SCRWHC100X0400C5BZP	Hex Cap Screw
	39	4	SL SH506ZDC	SLN 1/2 G5
	40	4	NUTLNI037CBZP	Nyloc 3/8
	41	24	SL SH515ZDC	SLN 3/4 G5
	42	16	SL SH521ZDC	SLN 1 G5
	43	8	WASHC050BZP	Washer Cut 1/2
	44	8	WASHC037BZP	Washer Cut 3/8
	45	32	WASHSAEHC075BZP	Washer SAE 3/4"
	46	32	WASHUSSHC100BZP	Washer Cut 1
	47	1	2707-00-DT-23	DEFLECTOR RH

EO = EARLY ORDER PARTS LIST

EO	ITEM	QTY	PART NUMBER	DESCRIPTION
	1	1	2707-DT-01	PAN ASSEMBLY
	2	1	2707-06-DT-02	BASE ASSEMBLY
	3	1	2707-06-DT-03	BALANCER ASSEMBLY
	4	48	ASRA23712	Rocker Arm 23712
	5	96	ASBUSCRW100X0600	Rocker Arm Bush/Bolt Assembly
	6	56	RS1515	Reaction Spring
	7	112	ASRSSCRW100X0300	Reaction Spring Bolt Assembly
	8	4	DS120	Drive Spring 12,000#
	9	8	ASDSSCR150X0500TN150	Drive Spring Bolt Assembly
	10	1	NCB12042P-A (SD11069801-A)	CONNECTING BRACKET
	11	2	NCB1230SP (SD-01-20-97-01-B)	Bal Connecting Bracket
	12	4	CA315100	Connecting Arm Plate
	17	2	EC215-400-7250-437	Eccentric
	18	1	NES2142B - HC (SD-11-06-98-03)	7/16" ECC Shaft HC
	19	2	XQC215-96	Pillow Block Ø2 15/16" (4 Bolt)
	20	4	XCP400-96	Flange Bearing Ø4"
	21	1	SF 2 15/16	Bushing
	22	1	M15HP-1800-254-60HZ G-SD	TOSHIBA 15 HP 1800 RPM 254T TEFC EQP Global SD MOTOR 230/460 VOLT, 3 PH, 60 HZ NEMA B DESIGN
	23	1	MOTOR B 254T	Motor Base
	24	1	3B200SF	Sheave
	25	1	3B48SD	SHEAVE
	26	3	BX85-C	V-BELT 85"
	27	1	SD 1 5/8	Bushing

SECTION A-A
SCALE 1/2" = 1' -0"

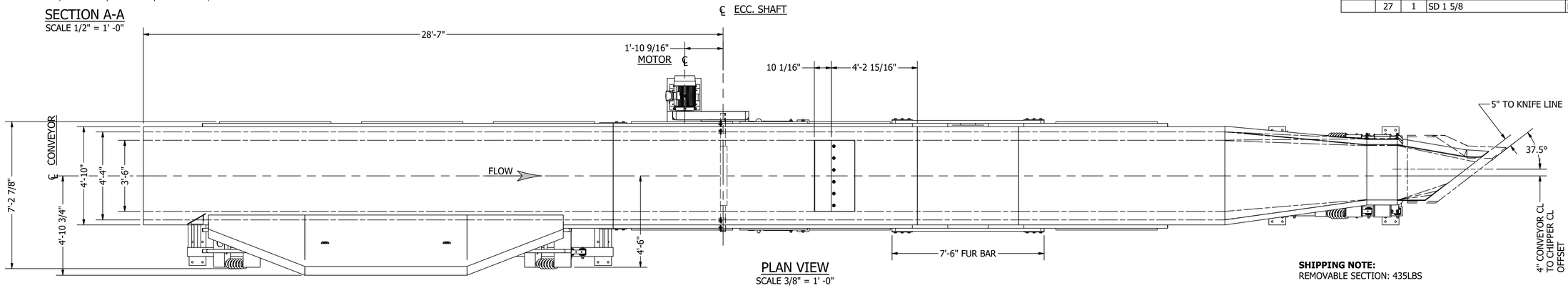

PLAN VIEW
SCALE 3/8" = 1' -0"

SHIPPING NOTE:
REMOVABLE SECTION: 435LBS

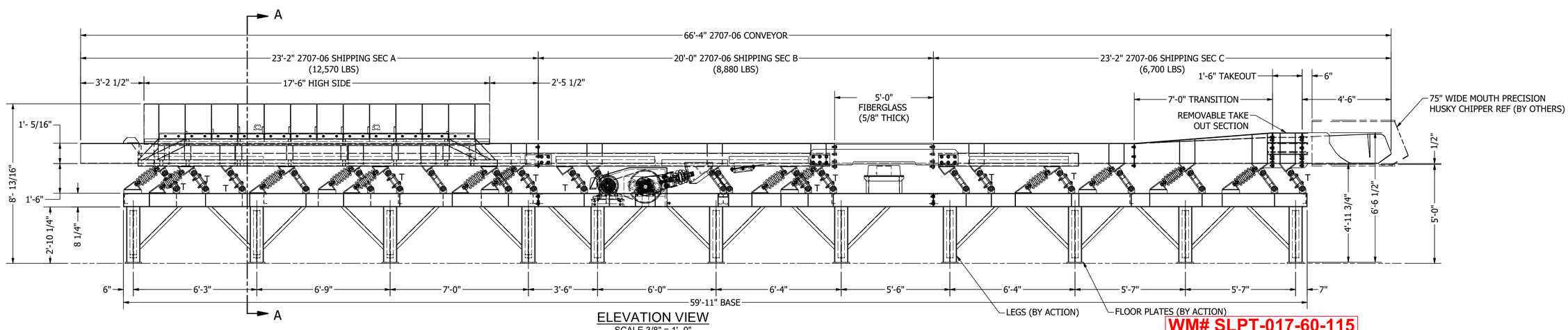

ELEVATION VIEW
SCALE 3/8" = 1' -0"

WM# SLPT-017-60-115

CUSTOMER APPROVAL AND DATE:

STATIC LOAD	DYNAMIC LOADING	MODEL / SIZE	OPERATING SPECIFICATIONS	NOTES
TOTAL	TOTAL			
28,585 LBS WITHOUT MATERIAL	1,700 LBS; 2,200 LBS; 2,200 LBS; 1,700 LBS	ONE (1) MODEL 42"/52" WIDE X 12" DEEP X 66'-4" LONG VIBRATING CONVEYOR	PAN STROKE 23 mm; BALANCER STROKE 24 mm; ECCENTRIC SHAFT RPM = 455	
ACTION SUPPLIED EQUIPMENT ONLY	ACTION EQUIPMENT COMPANY, INC. ASSUMES NO RESPONSIBILITY FOR THE DESIGN OF CONVEYOR FOUNDATIONS AND / OR SUPPORTING STEEL.	MATERIAL DESCRIPTION: SAWDUST, CHIPS, TIM BLOCKS	THIRD ANGLE PROJECTION; DRAWING TOLERANCES: UNLESS OTHERWISE SPECIFIED — DECIMAL .X = ± .06" .XX = ± .010" .XXX = ± .005"; FRACTION X/X = ± 1/16"; ANGLE X° = ± 1/2"; DIMENSIONS: INCHES UNLESS OTHERWISE SPECIFIED	PAINT: ORANGE (RAL # 2001) w/Safety Yellow Drive Guard SHIPPING BRACES MUST BE REMOVED BEFORE STARTING CONVEYOR. CUSTOMER TO SUPPLY STRUCTURAL SUPPORTS FOR MACHINE IF NOT PROVIDED BY ACTION.

THIS DRAWING WITH THE DESIGNS, IDEAS, AND DETAILS SHOWN HEREON IS THE PROPERTY OF ACTION EQUIPMENT COMPANY, INC., NEWBERG, OREGON, AND IS TO BE RETURNED UPON REQUEST. IT SHALL NOT BE USED, DISCLOSED TO OTHERS OR COPIED IN WHOLE OR IN PART WITHOUT EXPRESS WRITTEN AUTHORIZATION BY ACTION EQUIPMENT COMPANY, INC. ALL RIGHTS OF DESIGN OR INVENTION ARE RESERVED.

FOUNDATIONS, ANCHOR BOLTS, EMBEDDED STEEL FOR MOUNTING UNIT IN PLACE, SUPPORTS, MOTOR CONTROLS, CONDUIT AND ELECTRICAL WIRING, ALL NECESSARY CHUTEWORK, HOPPERS, SKIRTING AND ALL ITEMS NOT SHOWN INCLUDING UNLOADING AND ERECTION TO BE FURNISHED BY CUSTOMER UNLESS NOTED OTHERWISE.

SAFETY

SAFETY HAS BEEN GIVEN CONSIDERATION IN THIS ARRANGEMENT. PLEASE REVIEW MAINTENANCE MANUAL PRIOR TO INSTALLATION.

ACTION EQUIPMENT COMPANY, INC.
P.O. BOX 3100 NEWBERG, OREGON 97132
PHONE (503) 537 - 1111 sales@actionconveyors.com
www.actionconveyors.com

ACTION VIBRATORY EQUIPMENT

TITLE
LINE 4 CHIPER INFEED
XHDB CONVEYOR
FOR
WINDFALL LUMBER
WINDFALL, AZ

REV.	DATE	REVISION
B	9/22/2022	AS BUILT
A	6/2/2022	CHANGED RAL, FLR PLA BY ACTION

DRAWN	CBH	5/17/2022	SIZE D
APPROVED			DWG NO. 2707-06-GA-01