APPENDIX A G25 ELECTRICAL INFORMATION

LX150 **Rev. A1.00+**

LX150 G25 WIRING DIAGRAM (1 OF 4)

Device Tag/Parts List

WM_PARTS_LIST-Manual

Device tag	Function	Wood-Mizer Part Number	Wood-Mizer Description	Qty.	X-Ref
CB1	P/F Motor breaker	051981	Circuit Breaker, 40A	1	3.309
CB2	Up/Down Motor Breaker	051981	Circuit Breaker, 40A	1	2.204
CB3	Key Switch ST Terminal Breaker	E20430	Breaker, 15A Manual Reset	1	3.311
CB4	U/D Drum / DB In_Out Breaker	053464	Breaker, 10A Manual Reset	1	2.209
CB5	Key Switch IGN Terminal Breaker	E20430	Breaker, 15A Manual Reset	1	1.105
CB6	Key Switch ST Terminal Breaker	E20430	Breaker, 15A Manual Reset	1	1.106
CB8	Debarker Motor Breaker	024256	Circuit Breaker, 50A	1	3.315
CB21	U/D Drum / DB In_Out Breaker	053464	Breaker, 10A Manual Reset	1	3.318
D1	Limit Switch Diode "OR"	073668	Wire Assembly, LX150 Up/Down Limit Diode OR	2	1.117;2.209
D3	Diode Assy, Solenoid Coil	015426	Diode Assy, Solenoid Coil Chassis GND	1	3.314
D4	"	015426	Diode Assy, Solenoid Coil Chassis GND	1	1.114
D5	"	015426	Diode Assy, Solenoid Coil Chassis GND	1	1.116
F1	Battery Fuse	073683	Z-Case Fuse 60A	1	1.101
F2	Starter Fuse	073684	Z-Case Fuse 150A	1	1.102
G1	Battery	079462	Battery, 12V 8A24M AGM	1	1.101
HR1	Hour Meter	015401	Digital Meter, Hour Rect Mount w/Gasket	1	1.106
KS1	Key Switch	P04350	Switch, key	1	1.107
M1	Blade Guide Arm In/Out Motor	079214	Motor Assy, 1/30HP 12V Gear w/Flying Leads	1	1.109
M3	Up/Down Motor	006747	0.50 HP DC Motor	1	2.207
M4	Feed Motor	006747	0.50 HP DC Motor	1	3.307
M5	Debarker Motor	053683	0.75 HP DC Motor	1	3.315
M7	Debarker In/Out Motor	079214	Motor Assy, 1/30HP 12V Gear w/Flying Leads	1	3.318
5M	Debarker Solenoid	015470	Solenoid, 200A 12V SPST Cont. Duty	1	3.313
R1	Feed Rate Switch (Potentiometer)	024450	Pot Assy, Feed Rate Control Sawmill	1	3.302
S1	Forward/Reverse Drum Switch	E20439	Drum Switch, P/F	1	3.307
S2	Up/Down Drum Switch	E20440	Drum Switch, U/D	2	1.118;2.207
S5	Blade Guide Arm Switch	024200	Switch, DPDT Toggle 21A Rev Mom Spade	1	1.109
S6	Debarker In/Out Switch	024200	Switch, DPDT Toggle 21A Rev Mom Spade	1	3.319
SOL4	Solenoid, 200A DPST	015417	Solenoid, 200A 12V DPST Cont. Duty	1	1.114
SOL5	"	015417	Solenoid, 200A 12V DPST Cont. Duty	1	1.116
U1	SimpleSet H-Bridge Assembly	053373	Bridge, SS	1	1.114
U2	SimpleSet Controller	053774	Controller, SimpleSet	1	1.116
U3	SimpleSet Encoder Assembly	074021	Encoder Assy, SimpleSet	1	1.116
U8	USB/Assy Power Port	011274	USB/ASSY Port	1	3.310
U9	Forward Feed Control Module	073547.	Module, Consolidated P/F	1	3.303

LX15040

Wood-Mizer®

Project Description: LX150G25

Revision:		Pg Desc: Parts list	
Mounting Location: +		Type: Parts list	
Prev. pg: 3	Page: C1	Next pg:	Total Pgs: 4

LX150 G25 WIRING DIAGRAM (2 OF 4)

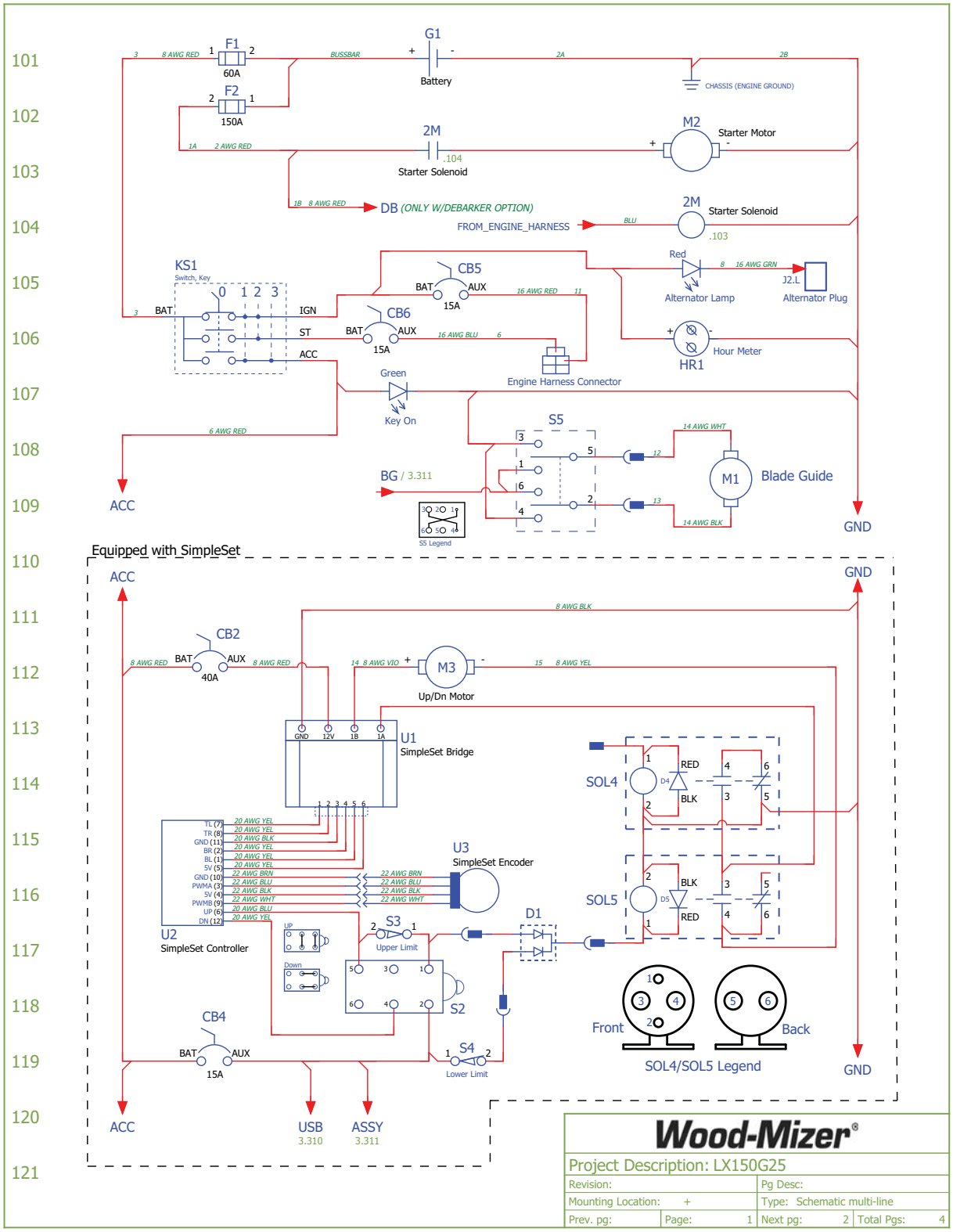

LX150 G25 WIRING DIAGRAM (3 OF 4)

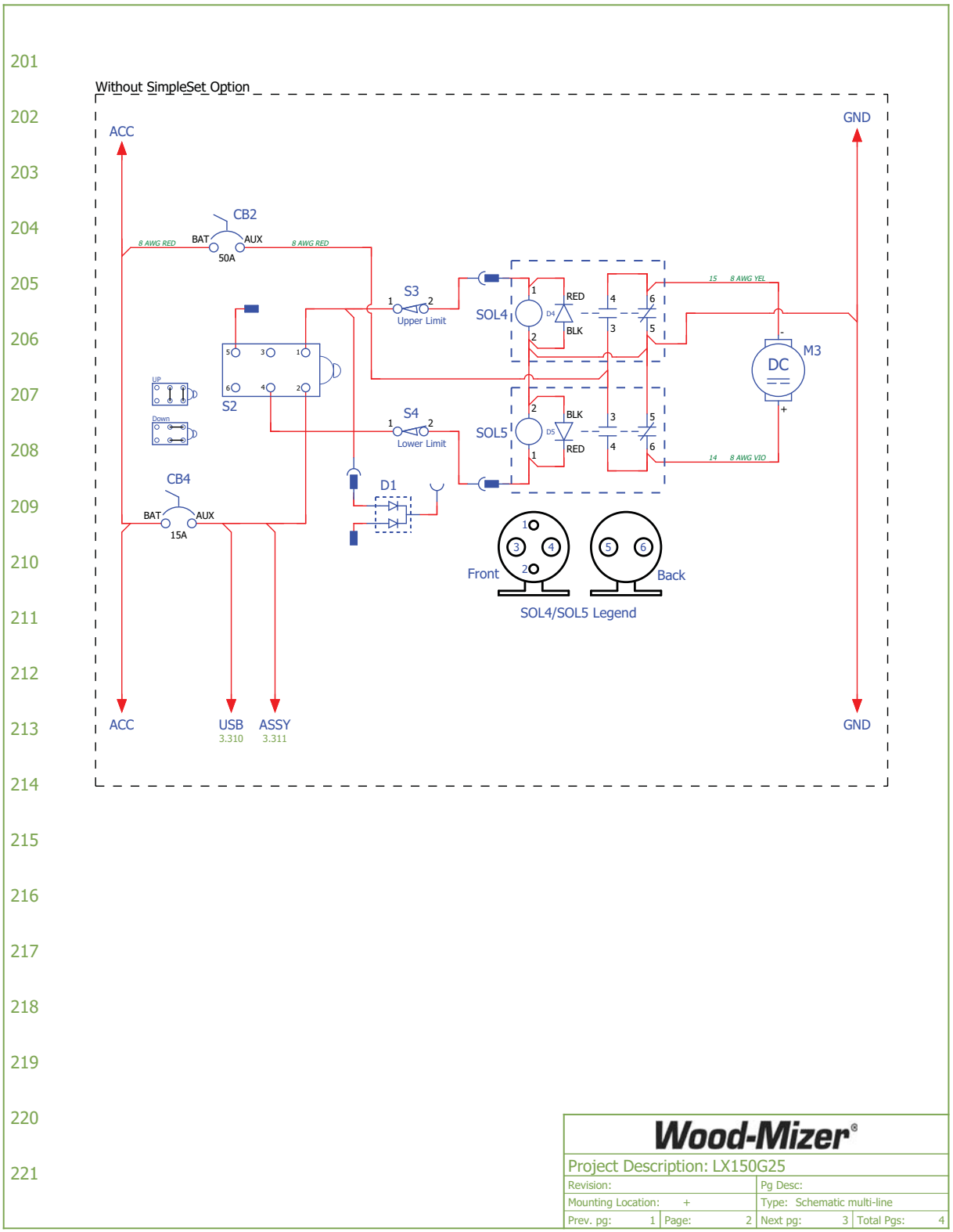
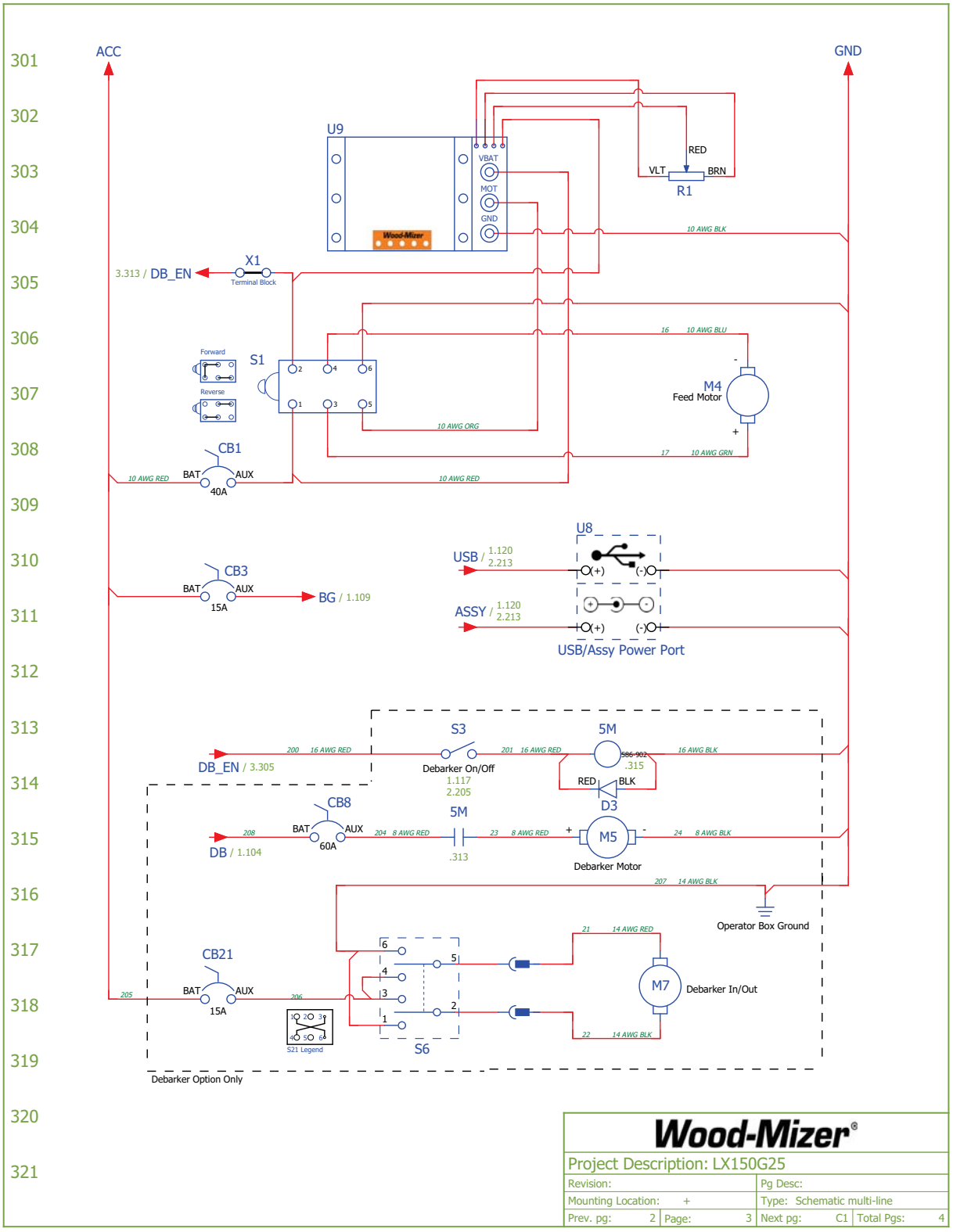
LX150 G25 WIRING DIAGRAM (4 OF 4)